Георги Димитров Тончев
ж.к. "Южен парк", блок 1, вх.Д, ап
София
inventortonchev@gmail.com

Наш знак: СпИС-1227 28.10.2022

Ваш знак:

Искане за предварително проучване за новост на изобретение с наименование

„Летателна система с периферно свързани каскадни съосни витла около роторни валове"

Патентното ведомство Ви уведомява, че във връзка с Ваше искане № СпИС-1227 от 24.10.2022г. е извършено проучване въз основа на:

☒ описанието, претенциите
☒ приложената фигура

Класове по МПК:B60F5/20; B64C29/00; B64C27/06; B64C27/16; B64C27/12

Бази-данни: IPAS; Esp@cenet, Internet

При проучването са намерени следните документи, посочени в приложения доклад:

<u>Патентни документи:</u>

WO2017081668 (A1); KR20200100352 (A); US2016207625 (A1); EP3760538 (A1)

И. Стефанова
Старши експерт ДЕЗИПМПД

С Т А Н О В И Щ Е

ОТНОСНО: предварително проучване за новост на изобретение с наименование „**Летателна система с периферно свързани каскадни съосни витла около роторни валове**“

вх. № СпИС-1227/24.10.2022 г.

Проучването е направено въз основа на представените патентни претенции 1-17, описание и приложената към него фигура.

Патентните претенции се отнасят до летателна система с периферно свързани каскадни съосни витла около роторни валове, включваща: основно тяло, поне една роторна опора, вал, множество витла, периферни лентовидни съединители, задвижка, изпълнителни механизми, оптимизиращ управленски блок, комбиниран датчик за метеорологичните параметри, комбиниран датчик за летателните параметри, комуникационен вход на телепредавател, въздушни кормила, тягово двукаскадно бокс-витло, дъговидни периферни съединители, въртящ се вал на тягов мотор, две пътнически седалки и една пилотска седалка.

Обект на настоящето проучване е да се обезпечи летателна система с периферно свързани каскадни съосни витла около роторни валове, за да се избегнат периферните им загуби и едновременно да се увеличи подемната сила и тягата, както , да се подобри структурната устойчивост на роторите и да са с ниска себестойност.

В резултат на извършеното проучване бяха намерени следните документи, които са отразени в доклада от проучването, отнасящи се летателна система с периферно свързани каскадни съосни витла около роторни валове.

В патентен документ WO2017081668 (A1) е разкрито безпилотно устройство за излитане, което се състои от модулно водоустойчиво тяло, шаси, валове, външна обвивка на тялото, система за задвижване, система за защита на витлото, платформа от повърхностен материал за плъзгане и кацане, контролни повърхности, бордов въздушен компресор, бордова система за електролиза, водоустойчив проводник през корпуса или антена, батерия, електроразпределително табло, модул за глобална система за позициониране, охлаждащо устройство, ръчно или автоматично разгъващ се парашут, устройство за външно закрепване и вътрешно поместване на товар и ултразвуков радарен сензор.

В патентен документ KR20200100352 (A) е разкрит дрон, включващ: пилотна част, част за качване, вал, електрически мотор, електрически цилиндър, витла, задвижваща част и жироскоп.

В патентен документ US2016207625 (A1) е разкрито въздухоплавателно средство, което може както да излита, така и да се приземява вертикално, да кръжи хоризонтално с висока крейсерска скорост, което има опорна конструкция, най-малко три ротора, тяга, витло и двигатели.

В патентен документ EP3760538 (A1) е разкрит автономен многороторен самолет, състоящ се от: корпус с камера, платформа за повдигане, бордов компютър и авионика. Самолетът включва една или повече системи за задвижване, един или повече потребителски интерфейси, витло, двигател и бордова енергийна система.

Анализът на обекта на проучването и известните решения показва следното:

Новост

В нито един от намерените при проучването документи не е разкрита летателна система с периферно свързани каскадни съосни витла около роторни валове, която да включва всички технически признаци на обекта на проучването.

Следователно, летателната система с периферно свързани каскадни съосни витла около роторни валове, отговаря на изискванията за новост, съгласно чл. 8 от Закона за патентите и регистрацията на полезните модели (ЗПРПМ).

28.10.2022

И. Стефанова
Старши експерт ДЕЗИПМПД

ПАТЕНТНО ВЕДОМСТВО НА РЕПУБЛИКА БЪЛГАРИЯ

ДОКЛАД ОТ ПРОУЧВАНЕ

ПРОУЧВАНЕ ВХ. № СпИС-1227/24.10.2022

I. Уточнен класификационен индекс по МПК

B60F5/20; B64C29/00; B64C27/06; B64C27/16; B64C27/12

II. ОБЛАСТ НА ПРОУЧВАНЕ:

Минимален обхват на проучване

Вид класификация:	Класификационен индекс:
МПК	B60F5/20; B64C29/00; B64C27/06; B64C27/16; B64C27/12

Бази данни, в които е извършено проучването

Esp@cenet; IPAS

III. Релевантни документи

Категория	Цитиране на документите с посочване на релевантните части	Релевантни претенции
A	WO2017081668 (A1), [ZHOU DYLAN [CN]; ZHOU ANDREW [CN]; ZHOU TIGER [CN]], публ.на 18.05.17г.	1-17
A	KR20200100352 (A), [PARK JU HYUN [KR]], публ. на 26.08.20г. https://worldwide.espacenet.com/publicationDetails/biblio?II=2&ND=5&adjacent=true&locale=en_EP&FT=D&date=20200826&CC=KR&NR=20200100352A&KC=A	1-17
A	US2016207625 (A1),[AIRBUS DEFENCE & SPACE GMBH [DE]; STEUBBEUS FLUGZEUG UND LEICHTBAU GMBH [DE] +], публ. на 21.07.16г.	1-17
A	EP3760538 (A1), [BROELSTAERK APS [DK] +], публ. на 06.01.21г.	1-17

Категория на документа **X** – документът е от особено значение; претендираното изобретение няма новост или изобретателска стъпка, когато документът се разглежда самостоятелно **A** – документ, отразяващ нивото на техниката, който не е от особено значение	**Y** – документът е от особено значение; претендираното изобретение няма изобретателска стъпка, когато документът се комбинира с един или повече други документи и тази комбинация е очевидна за специалист в областта	
Дата: 28.10.2022	Име: И. Стефанова	И. Стефанова Старши експерт ДЕЗИПМПД

(19) Europäisches Patentamt
European Patent Office
Office européen des brevets

(11) EP 3 760 538 A1

(12) EUROPEAN PATENT APPLICATION

(43) Date of publication:
06.01.2021 Bulletin 2021/01

(51) Int Cl.:
B64C 27/08 (2006.01) B64C 39/02 (2006.01)

(21) Application number: 20178677.9

(22) Date of filing: 08.06.2020

(84) Designated Contracting States:
AL AT BE BG CH CY CZ DE DK EE ES FI FR GB GR HR HU IE IS IT LI LT LU LV MC MK MT NL NO PL PT RO RS SE SI SK SM TR
Designated Extension States:
BA ME
Designated Validation States:
KH MA MD TN

(30) Priority: 01.07.2019 DK PA201900797

(71) Applicant: Broelstaerk ApS
8520 Lystrup (DK)

(72) Inventor: Fredsted, Thomas Vestergaard
8520 Lystrup (DK)

(74) Representative: Sun, Yiming
HUASUN Patent- und Rechtsanwälte
Friedrichstraße 33
80801 München (DE)

(54) AUTONOMOUS MULTI-ROTOR AIRPLANE

(57) An autonomous multi-rotor airplane (100) comprises a body frame (102) with a chamber (103). The chamber (103) is configured to provide space for one or more skydivers or jumpers (106), a lifting platform (108) having an onboard computer and an avionic system. The airplane (100) comprises one or more propulsion systems (112) operably coupled to the lifting platform (100). The airplane (100) is configured to find and execute the optimal flight path based on given information by the operator. The airplane comprises one or more user interfaces securely positioned inside the chamber. The user interfaces are configured to enable the skydiver to view the location and the optimal flight path, and adjust the angle of the autonomous multi-rotor airplane against the wind direction. The user interface is configured to enable the skydiver to operate and land the autonomous multi-rotor airplane at a landing zone.

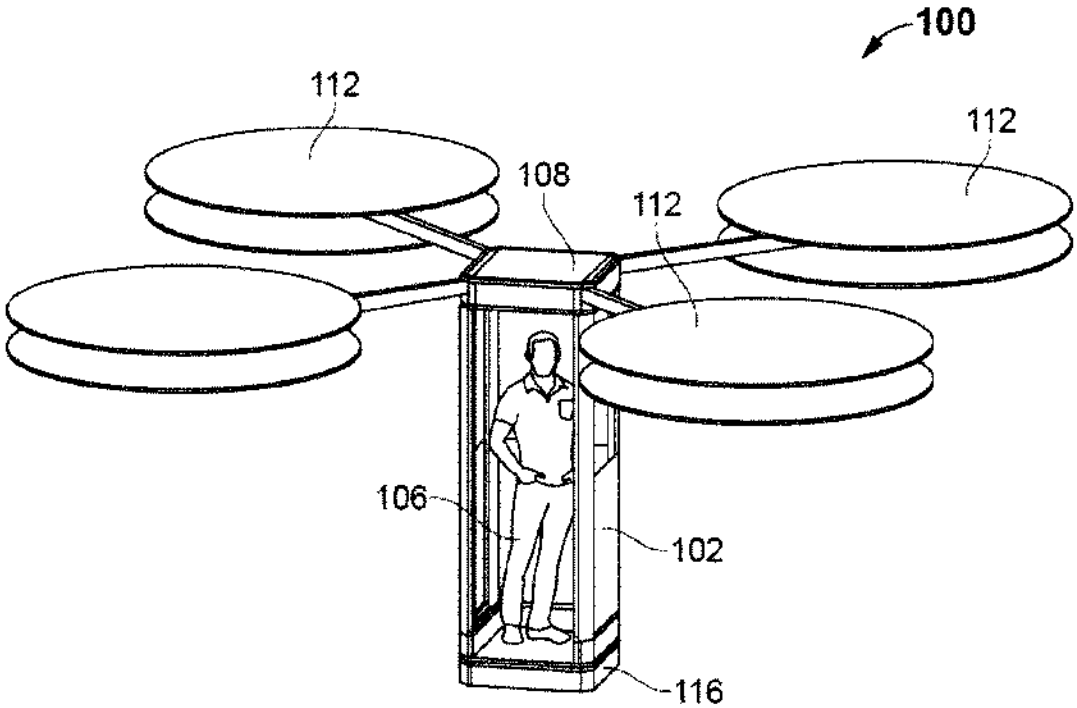

Fig. 1

EP 3 760 538 A1

Description

CROSS-REFERENCE TO RELATED APPLICATION

[0001] This application claims priority to Danish Patent Application No. 201900797, titled "AUTONOMOUS MULTI-ROTOR AIRPLANE" filed on July 01, 2019. The specification of the above referenced patent application is incorporated herein by reference in its entirety.

BACKGROUND OF THE INVENTION

A. Technical field

[0002] The invention disclosed herein generally relates to a multi-rotor airplane. More particularly, the present invention relates to an autonomous multi-rotor airplane used for skydiving.

B. Description of related art

[0003] Skydiving or parachute jump is a stimulating pleasurable sport activity and extremely popular around the world. Generally, skydivers or jumpers are reached to a desired high altitude by an airplane or aircraft and jump from the high altitude to get maximum flying time. Skydive airplanes or jump planes are used to pick up and carry a number of skydivers or jumpers from different locations to the desired high altitude for skydiving or parachute jump.

[0004] Currently, the skydive airplanes or jump planes are incorporated with a single turbo engine or dual/twin turbo engines. The skydive planes are capable of taking at least 10-15 skydivers simultaneously to the high altitude, for example, 3,000 to 15,000 feet in about 10 to 20 mins. The skydivers or jumpers could jump from an exit door of the skydive planes from the high altitude. However, the existing skydive planes are difficult to operate and control by one or more pilots or operators in bad weathers. This difficulty arises from the decrease in the situational awareness of the operator, which in turn, significantly decreases working efficiency and at the same time increases risks. The existing skydive planes are very expensive to operate and maintenance due to low efficiency. Further, the existing skydive planes are not comfortable for picking and dropping the new and experienced skydivers at different locations. In addition, the existing autonomous airplanes are used for different purposes, for example, transporting goods. The autonomous airplanes may be remotely controlled or self-controlled by remote or onboard computers.

[0005] The skydive airplanes or jump planes carry excess fuel above the minimum needed to compensate delays for each flight. The amount of fuel burned by an aircraft during a flight depends on many factors that range from the age and type of aircraft to the specific flight plan approved by air traffic control and any excess fuel required to be carried. The burning of liquid hydrocarbon fuels releases greenhouse gases such as carbon dioxide (CO_2) and methane into the atmosphere and causes global warming.

[0006] A prior art, WO 2017/173159 A1 of Russell David Wayne discloses Unmanned Aerial Vehicles also known as UAVs or Drones, either autonomous or remotely piloted, are classified as drones by the US Federal Aviation Administration (FAA) as weighing under 212 pounds. The system described herein details Autonomous Flight Vehicles (AFV) which weigh over 212 pounds but less than 1,320 pounds which may require either a new classification or a classification such as Sport Light Aircraft, but without the requirement of a pilot due to the safe autonomous flight system such as the Safe Temporal Vector Integration Engine. Another prior art, US 2019/0106206 A1 of Shi Xichen et al., discloses an automated flying transport vehicle that capitalizes on the strengths and complexities of a fixed and rotary winged aircraft. The air transport vehicle comprises a body aerodynamically designed to generate lift and a plurality of rotors that can generate lift as well as forward thrust from which a fixed wing portion of the air transport vehicle will begin to generate additional lift allowing for a sustained flight.

[0007] Further, in another prior art, WO 2018/122821 A2 of Alshdaifat Wasfi, discloses a City Autonomous Airport (CAA) and means to handle autonomously booking of Aero-cars aerial containers reception and parcels delivery according to a specific selected root managed via GPS and controlled path programs. The CAA consists of: Terminal 1 to manage passenger's flights via multiple types of Aero-cars through a landing or take-off yards or elevator terminal, and handling aerial containers in the same. Terminal 2 handles the reception of the dropped containers from remotely controlled aircrafts toward elevator inlets to be distributed by pick-up drones to shelves and autonomous ground stations in multiple floors, and handled as aerial parcel sets to delivery drones on top of elevator ends. Terminal 3 is a yard type handling of containers and distributing their parcels content via UAVs. *However,* above-mentioned prior arts fail to provide optimal and safe solution for a skydiver or jumper using the autonomous multi-rotor airplane with an user interface enabling the skydiver to view the location and the optimal flight path, and adjust the angle of the autonomous multi-rotor airplane against the wind direction, thereby flying to desired altitudes with the skydivers for a freefall using a parachute via an optimal flight path based on a control input given by an operator via an onboard computer positioned in a lifting platform of the autonomous multi-rotor airplane.

[0008] In the light of above-mentioned problems, it is need to provide a multi-rotor autonomous airplane for skydivers or jumpers that executes an optimal flight path based on the information, such as, wind direction, wind speed, and the desired altitude, given by the operator who is in direct contact with the flight controllers. There is also a need to provide a multi-rotor autonomous air-

plane, capable of picking and carrying one or more skydivers at a time to the desired high altitude within few minutes. Further, there is also a need to provide an environment-friendly multi-rotor autonomous airplane to safely pick up and comfortably drop the skydivers or jumpers at different locations and altitudes.

SUMMARY OF THE INVENTION

[0009] The present invention generally discloses a multi-rotor airplane. Further, the present invention discloses to an autonomous multi-rotor airplane used for skydiving.

[0010] The present invention discloses an autonomous multi-rotor airplane for skydiving. An autonomous multi-rotor airplane comprises a body frame with a chamber. The chamber is configured to provide space for one or more skydivers or jumpers, a lifting platform having an onboard computer and an avionic system. The lifting platform is configured to securely affixed to a top portion of the body frame via a plurality of supporters. The autonomous multi-rotor airplane comprises one or more propulsion systems operably coupled to the lifting platform via a plurality of supporting arms. The propulsion systems are configured to lift the autonomous multi-rotor airplane, thereby flying and climbing to desired altitudes with the skydivers for a freefall using a parachute via an optimal flight path based on a control input given by an operator via the onboard computer positioned in the lifting platform. The airplane is configured to find and execute the optimal flight path based on given information by the operator. The information includes wind direction, wind speed, and desired altitudes, confirmation of take-off position and landing position, and confirmation of the skydiver's exit point/drop zone and desired landing position. The autonomous multi-rotor airplane comprises one or more user interfaces securely positioned inside the chamber of the body frame, wherein the user interfaces are configured to enable the skydiver to view the location and the optimal flight path, and adjust the angle of the autonomous multi-rotor airplane against the wind direction, and wherein the user interface is at least any one of a display and control buttons, are further configured to enable the skydiver to operate and land the autonomous multi-rotor airplane at a landing zone.

[0011] Other objects, features and advantages of the present invention will become apparent from the following detailed description. It should be understood, however, that the detailed description and the specific examples, while indicating specific embodiments of the invention, are given by way of illustration only, since various changes and modifications within the spirit and scope of the invention will become apparent to those skilled in the art from this detailed description.

BRIEF DESCRIPTION OF DRAWINGS

[0012] The foregoing summary, as well as the following detailed description of the invention, is better understood when read in conjunction with the appended drawings. For the purpose of illustrating the invention, exemplary constructions of the invention are shown in the drawings. However, the invention is not limited to the specific methods and structures disclosed herein. The description of a method step or a structure referenced by a numeral in a drawing is applicable to the description of that method step or structure shown by that same numeral in any subsequent drawing herein.

FIG. 1 exemplarily illustrates a perspective view of an autonomous multi-rotor airplane used to fly skydivers in an embodiment of the present invention.

FIG. 2 exemplarily illustrates an exploded view of the autonomous multi-rotor airplane in an embodiment of the present invention.

DETAILED DESCRIPTION OF EMBODIMENTS

[0013] A description of embodiments of the present invention will now be given with reference to the Figures. It is expected that the present invention may be embodied in other specific forms without departing from its spirit or essential characteristics. The described embodiments are to be considered in all respects only as illustrative and not restrictive.

[0014] Referring to **FIG. 1**, an autonomous multi-rotor airplane **100** used by a skydiver **106** for a freefall is disclosed. In one embodiment, the multi-rotor airplane **100** is configured to fly and climb to one or more desired altitudes with one or more skydivers or jumpers **106** for a freefall. In one embodiment, the multi-rotor airplane **100** is further configured to find and execute an optimal flight path based on given information by an operator. The multi-rotor airplane **100** is pre-programmed to fly and climb to the desired altitudes in the optimal flight path and land at a landing zone. The information includes, but not limited to, altitude, wind direction, wind speed, confirmation of take-off position and landing position, and confirmation of the skydiver's exit point/drop zone and desired landing position. The skydiver's exit point will be offset linearly to the landing point due to wind speed and wind direction. The wind speed and direction are must be taken into consideration in order to land in the designated landing area or drop zone. When the multi-rotor airplane **100** reached to the drop zone/point, the skydivers **106** could jump or leap from the multi-rotor airplane **100** for a freefall and land safely on the ground using a parachute and the multi-rotor airplane **100** could safely land at the landing zone. In one embodiment, the multi-rotor airplane **100** comprises a body frame **102**, a lifting platform **108**, one or more propulsion systems **112**, and an onboard power system **116**. In one embodiment, the lifting platform **108** is configured to securely affixed to the body frame **102** via a plurality of supporters **110**.

[0015] Referring to **FIG. 2**, the autonomous multi-rotor

airplane **100** is disclosed. In one embodiment, the multi-rotor airplane **100** comprises a body frame **102.** The body frame **102** includes a chamber **103.** In one embodiment, the chamber **103** is configured to provide space for one or more skydivers or jumpers **106** (shown in **FIG. 1**). The skydiver **106** could sit and/or stand in the chamber **103** and comfortably and safely leap from the multi-rotor airplane **100** for a freefall using a parachute. In one embodiment, the multi-rotor airplane **100** further comprises a lifting platform **108.** The lifting platform **108** includes an onboard computer and an avionic system. In one embodiment, the onboard computer could be a flight controller. In one embodiment, the lifting platform **108** is configured to securely affixed to a top portion of the body frame **102** via a plurality of supporters **110.** In one embodiment, the multi-rotor airplane **100** further comprises one or more propulsion systems **112.** The propulsion systems **112** are operably coupled to the lifting platform **108** via a plurality of supporting arms **104.** The propulsion systems **112** are configured to lift the multi-rotor airplane **100**, thereby flying and climbing one or more desired altitudes with the skydivers for a freefall via the optimal flight path based on a control input given by an operator via the onboard computer positioned in the lifting platform **108.** In one embodiment, the operator could send the control inputs to the onboard computer positioned in the lifting platform **108** using a remote computing device.

[0016] In one embodiment, the plurality of arms **104** could be radially and securely affixed to the lifting platform **102** of the multi-rotor airplane **100.** In one embodiment, each propulsion system **112** comprises a propulsion motor with a rotor and a propeller. The propeller is rotatably affixed to the rotor of the propulsion motor. In one embodiment, each propulsion system **112** is further configured to apply thrust during operation in any direction. The onboard computer positioned in the lifting platform **108** is configured to control the operation of the multi-rotor airplane **100.** In one embodiment, the onboard computer is further configured to measure the orientation of the autonomous multi-rotor airplane **100** and make adjustments according to the desired orientation.

[0017] In one embodiment, one or more user interfaces are securely positioned inside the chamber **103** of the body frame **102.** The user interfaces are configured to enable the skydiver **106** to view the location and the optimal flight path. The user interfaces are further configured to enable the skydiver **106** to adjust the angle of the multi-rotor airplane **100** against the wind direction to reach the correct angle while leaping or jumping from the chamber **103** for a freefall using a parachute. The skydiver **106** could operate and land the multi-rotor airplane **100** at the landing zone using the user interfaces. In one embodiment, the user interface could be, but not limited to, a display and control buttons/levers. In one embodiment, the operator or ground crew could also operate and control, for example, take-off, landing, or adjusting the direction of the multi-rotor airplane **100** against the wind direction, using the remote computing device.

[0018] In one embodiment, the multi-rotor airplane **100** further comprises an onboard power system **116.** The onboard power system **116** is securely affixed to a bottom portion of the body frame **102.** The onboard power system **116** is configured to supply power to the lifting platform **108** and the one or more propulsion systems **112** using cables. In one embodiment, the onboard power system **116** comprises, but not limited to, a plurality of batteries. The onboard power system **116** is further configured to provide a lowest gravity point and stability for the multi-rotor airplane **100** during landing.

[0019] In one embodiment, the multi-rotor airplane **100** could require a small space on the ground for landing and takeoff with the skydivers **106.** The multi-rotor airplane **100** could fly and climb within the regulated air space to reach the drop zones. The operator could effectively operate and control, for example, landing and/or take-off the multi-rotor airplane **100** by giving the control inputs to the onboard computer or a flight controller using a remote computing device. In one embodiment, the multi-rotor airplane **100** further comprises a global positioning system (GPS) module and a built-in gyroscope. The GPS module is configured to the geolocation of the multi-rotor airplane **100** and allows the onboard computer to follow the optimal flight plan. In one embodiment, the built-in gyroscope is configured to adjust the speed of the one or more propulsion systems **112** which always keeps in a horizontal position. The navigation on three axes occurs by adjusting the speed of the rotors of the propulsion motors, individually. The airplane's methodology is mostly reminiscent to modern drones that typically have, but not limited to, between 4 and 8 rotors with individual propulsion system/engines **112.** In one embodiment, the multi-rotor airplane **100** is further configured to receive the control inputs from the operator during flying or climbing to the desired high altitudes. The skydiver or jumper **106** could adjust the directions of the multi-rotor airplane **100** using the user interface positioned inside the chamber **103** when the wind direction is different than expected.

[0020] The advantages of the present invention include, the skydiver or jumper **106** could comfortably and safely jump or leap from the multi-rotor airplane **100** for a freefall using a parachute. The multi-rotor airplane **100** is environment-friendly and requires less space for landing and take-off from the ground. The multi-rotor airplane **100** reduces the dependency on the staff or crew members at the drop zone and creates greater operational flexibility. The multi-rotor airplane **100** provides safety and comfort for the skydivers **106** and prevents serious injuries while jumping from the multi-rotor airplane **100.**

[0021] Preferred embodiments of this invention are described herein, including the best mode known to the inventors for carrying out the invention. It should be understood that the illustrated embodiments are exemplary only and should not be taken as limiting the scope of the invention.

[0022] The foregoing description comprise illustrative

embodiments of the present invention. Having thus described exemplary embodiments of the present invention, it should be noted by those skilled in the art that the within disclosures are exemplary only, and that various other alternatives, adaptations, and modifications may be made within the scope of the present invention. Merely listing or numbering the steps of a method in a certain order does not constitute any limitation on the order of the steps of that method. Many modifications and other embodiments of the invention will come to mind to one skilled in the art to which this invention pertains having the benefit of the teachings in the foregoing descriptions. Although specific terms may be employed herein, they are used only in generic and descriptive sense and not for purposes of limitation. Accordingly, the present invention is not limited to the specific embodiments illustrated herein.

Claims

1. An autonomous multi-rotor airplane comprising a body frame having a chamber, wherein the chamber is configured to provide space for one or more skydivers or jumpers, a lifting platform having an onboard computer and an avionic system, wherein the lifting platform is configured to securely affixed to a top portion of the body frame via a plurality of supporters, and one or more propulsion systems operably coupled to the lifting platform via a plurality of supporting arms, wherein the propulsion systems are configured to lift the autonomous multi-rotor airplane, thereby flying and climbing to desired altitudes with the skydivers for a freefall using a parachute via an optimal flight path based on a control input given by an operator via the onboard computer positioned in the lifting platform, **characterized by**:

   the airplane is configured to find and execute the optimal flight path based on given information by the operator, wherein the information includes wind direction, wind speed, and desired altitudes, confirmation of take-off position and landing position, and confirmation of the skydiver's exit point/drop zone and desired landing position, and
   one or more user interfaces securely positioned inside the chamber of the body frame, wherein the user interfaces are configured to enable the skydiver to view the location and the optimal flight path, and adjust the angle of the autonomous multi-rotor airplane against the wind direction, and
   wherein the user interface is at least any one of a display and control buttons, are further configured to enable the skydiver to operate and land the autonomous multi-rotor airplane at a landing zone.

2. The multi-rotor airplane of claim 1, wherein the plurality of supporting arms are radially and securely affixed to the lifting platform of the autonomous multi-rotor airplane.

3. The multi-rotor airplane of claim 1, wherein each propulsion system comprises a propulsion motor with a rotor and a propeller, wherein said propeller is rotatably affixed to the rotor of the propulsion motor.

4. The multi-rotor airplane of claim 1, further comprises an onboard power system securely positioned at a bottom portion of the body frame, wherein the onboard power system is configured to supply power to the lifting platform and the one or more propulsion systems.

5. The multi-rotor airplane of claim 1, is configured to fly and climb to desired altitudes via the optimal flight path based on the control input given by the operator using a remote computing device via the onboard computer positioned in the lifting platform.

6. The multi-rotor airplane of claim 1, wherein the onboard computer positioned in the lifting platform is configured to control the operation and measure the orientation of the autonomous multi-rotor airplane and make adjustments according to the desired orientation.

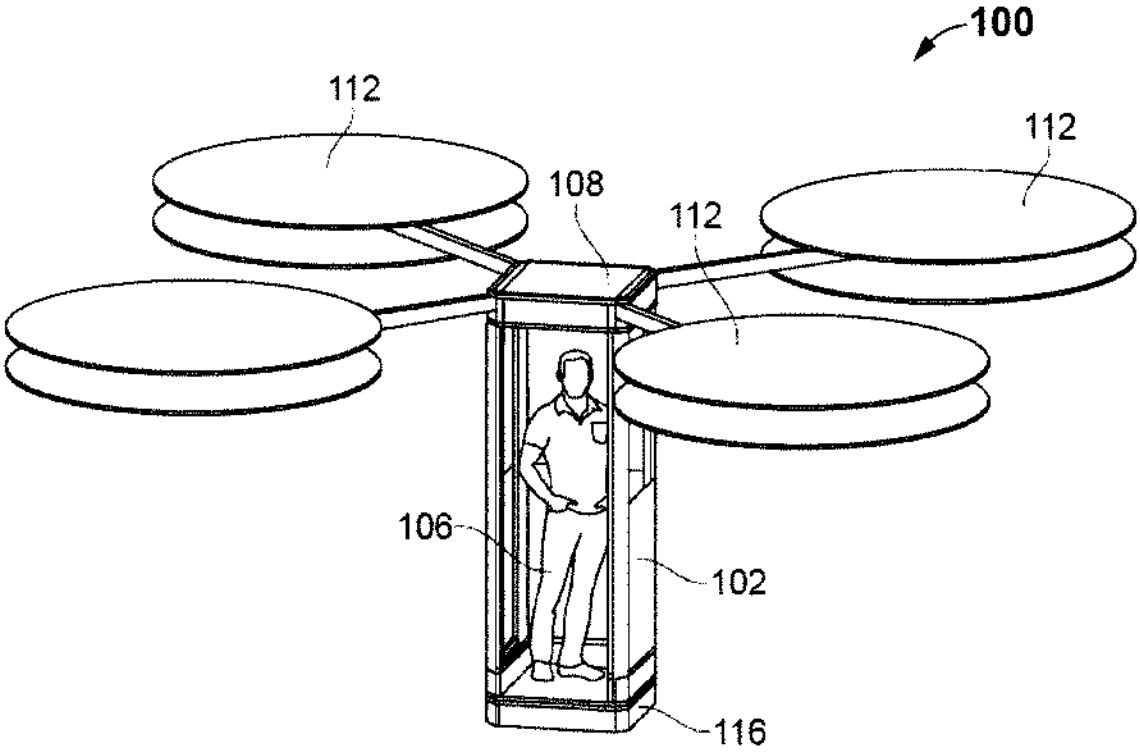
100
112
112
108
112
106
102
116

Fig. 1

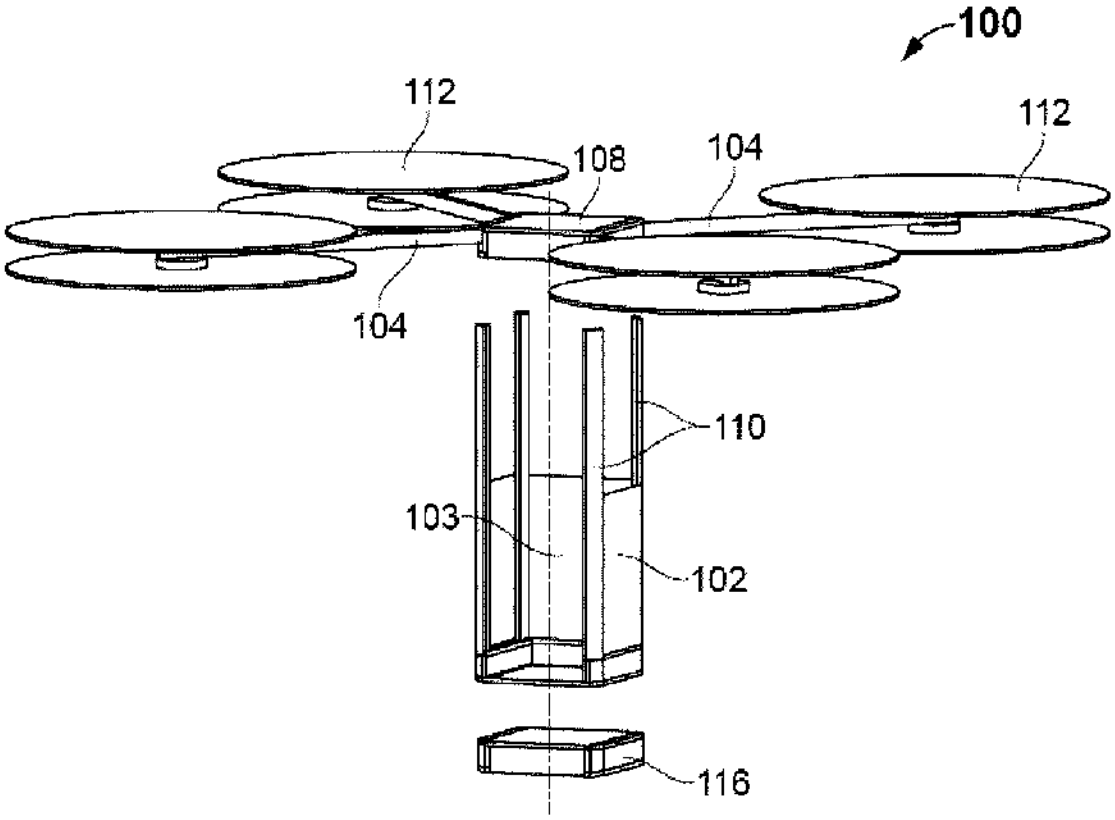
100
112
112
108
104
104
110
103
102
116

Fig. 2

Europäisches Patentamt
European Patent Office
Office européen des brevets

EUROPEAN SEARCH REPORT

Application Number
EP 20 17 8677

DOCUMENTS CONSIDERED TO BE RELEVANT

Category	Citation of document with indication, where appropriate, of relevant passages	Relevant to claim	CLASSIFICATION OF THE APPLICATION (IPC)
X	US 2018/237086 A1 (EVANS MICHAEL STEWARD [US]) 23 August 2018 (2018-08-23) * paragraph [0056] - paragraph [0065]; figures 1a-17 * -----	1-6	INV. B64C27/08 B64C39/02
X	US 2019/054630 A1 (LEWIS COLLIN [US]) 21 February 2019 (2019-02-21) * paragraph [0045]; figures 1-9 * * paragraph [0138] - paragraph [0146] * -----	1,2	
E	WO 2020/184602 A1 (PRODRONE CO LTD [JP]) 17 September 2020 (2020-09-17) * paragraph [0022] - paragraph [0029]; figures 1-2 * * paragraph [0058] - paragraph [0065] * -----	1-3,5,6	
A	US 2017/166309 A1 (SEKIYA KAZUMA [JP]) 15 June 2017 (2017-06-15) * figures 1-6 * -----	1-6	
A	WO 2011/002309 A1 (BLUE SKY VENTURES [NZ]; HARRIS ROBERT [NZ]) 6 January 2011 (2011-01-06) * figures 1-57 * -----	1-6	TECHNICAL FIELDS SEARCHED (IPC) B64C

The present search report has been drawn up for all claims

Place of search	Date of completion of the search	Examiner
Munich	10 November 2020	Retucci, Adriano

CATEGORY OF CITED DOCUMENTS

X : particularly relevant if taken alone
Y : particularly relevant if combined with another document of the same category
A : technological background
O : non-written disclosure
P : intermediate document

T : theory or principle underlying the invention
E : earlier patent document, but published on, or after the filing date
D : document cited in the application
L : document cited for other reasons

& : member of the same patent family, corresponding document

EPO FORM 1503 03.82 (P04C01)

ANNEX TO THE EUROPEAN SEARCH REPORT ON EUROPEAN PATENT APPLICATION NO. EP 20 17 8677

This annex lists the patent family members relating to the patent documents cited in the above-mentioned European search report.
The members are as contained in the European Patent Office EDP file on
The European Patent Office is in no way liable for these particulars which are merely given for the purpose of information.

10-11-2020

Patent document cited in search report	Publication date	Patent family member(s)	Publication date
US 2018237086 A1	23-08-2018	NONE	
US 2019054630 A1	21-02-2019	NONE	
WO 2020184602 A1	17-09-2020	JP 6755596 B2	16-09-2020
		JP 2020147054 A	17-09-2020
		WO 2020184602 A1	17-09-2020
US 2017166309 A1	15-06-2017	DE 102016224479 A1	14-06-2017
		JP 2017104365 A	15-06-2017
		US 2017166309 A1	15-06-2017
WO 2011002309 A1	06-01-2011	NONE	

EPO FORM P0459

For more details about this annex : see Official Journal of the European Patent Office, No. 12/82

REFERENCES CITED IN THE DESCRIPTION

This list of references cited by the applicant is for the reader's convenience only. It does not form part of the European patent document. Even though great care has been taken in compiling the references, errors or omissions cannot be excluded and the EPO disclaims all liability in this regard.

Patent documents cited in the description

- DK 201900797 **[0001]**
- WO 2017173159 A1, Russell David Wayne **[0006]**
- US 20190106206 A1, Shi Xichen **[0006]**
- WO 2018122821 A2, Alshdaifat Wasfi **[0007]**

US 20160207625A1

(19) United States

(12) Patent Application Publication

(10) Pub. No.: US 2016/0207625 A1

(43) Pub. Date: Jul. 21, 2016

JUDAS et al.

(54) AIRCRAFT CAPABLE OF VERTICAL TAKE-OFF

(71) Applicants: **Airbus Defence and Space GmbH**, Ottobrunn (DE); **STEUBBEUS FLUGZEUG- UND LEICHTBAU GMBH**, Stuttgart (DE)

(72) Inventors: **Michael JUDAS**, Muenchen (DE); **Friederike STRATENBERG**, Ingolstadt (DE); **Jan VAN TOOR**, Muenchen (DE); **Werner SCHOLZ**, Ohmden (DE); **Berthold KARRAIS**, Epfendorf (DE); **Wolfgang STANGL**, Muenchen (DE)

(73) Assignee: **Airbus Defence and Space GmbH**, Ottobrunn (DE)

(21) Appl. No.: **14/915,101**

(22) PCT Filed: **Aug. 29, 2014**

(86) PCT No.: **PCT/EP2014/068410**

§ 371 (c)(1),
(2) Date: **Feb. 26, 2016**

(30) **Foreign Application Priority Data**

Aug. 29, 2013 (DE) 10 2013 109 392.2

Publication Classification

(51) **Int. Cl.**

B64C 29/00	(2006.01)
B64C 27/08	(2006.01)
B64C 27/473	(2006.01)
B64C 3/38	(2006.01)
B64C 5/08	(2006.01)
B64D 27/02	(2006.01)
B64D 27/24	(2006.01)
B64C 39/02	(2006.01)
B64C 39/08	(2006.01)

(52) **U.S. Cl.**

CPC ***B64C 29/0025*** (2013.01); ***B64C 39/024*** (2013.01); ***B64C 27/08*** (2013.01); ***B64C 27/473*** (2013.01); ***B64C 39/08*** (2013.01); ***B64C 5/08*** (2013.01); ***B64D 27/02*** (2013.01); ***B64D 27/24*** (2013.01); ***B64C 3/38*** (2013.01); *B64C 2201/108* (2013.01); *B64C 2201/104* (2013.01); *B64C 2201/165* (2013.01); *B64D 2027/026* (2013.01)

(57) **ABSTRACT**

The invention relates to an aircraft which can both take off and land vertically and can hover and also fly horizontally at a high cruising speed. The aircraft has a support structure, a wing structure, at least three and preferably at least four lifting rotors and at least one thrust drive. The wing structure is designed to generate a lifting force for the aircraft during horizontal motion. To achieve this the wing structure has at least one mainplane provided with a profile that generates dynamic lift. The wing structure is preferably designed as a tandem wing structure. Each of the lifting rotors is fixed to the support structure, has a propeller and is designed to generate a lifting force for the aircraft by means of a rotation of the propeller, said force acting in a vertical direction. The thrust drive is designed to generate a thrust force on the support structure, said force acting in a horizontal direction. The lifting rotors can have a simple construction, i.e. they can have a simple rigid propeller for example, and a vertical take-off or hovering of the aircraft can be controlled, in a similar manner to quadcopters, by a simple control of the speeds of the lifting rotors. High cruising speeds can be achieved as a result of the additional horizontally acting thrust drive.

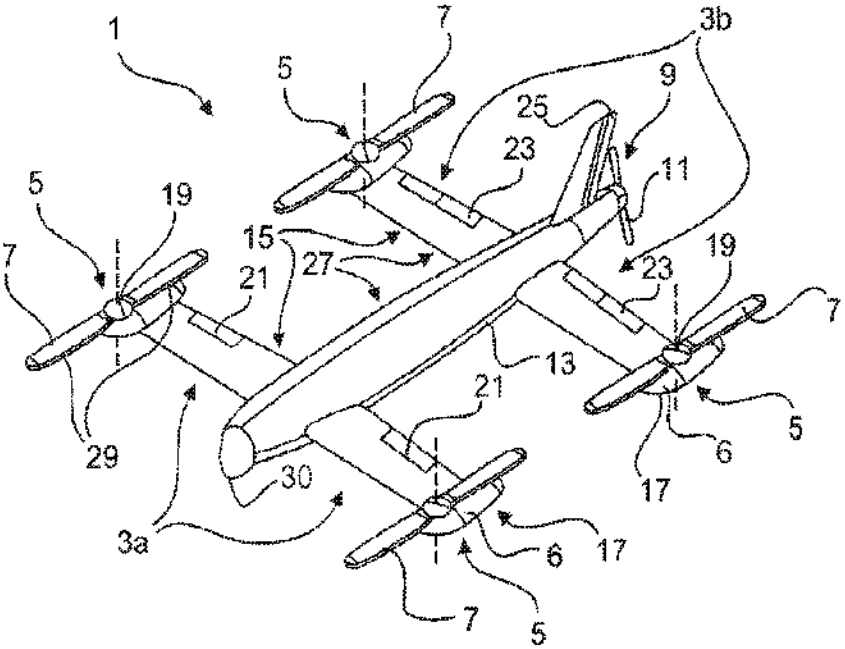

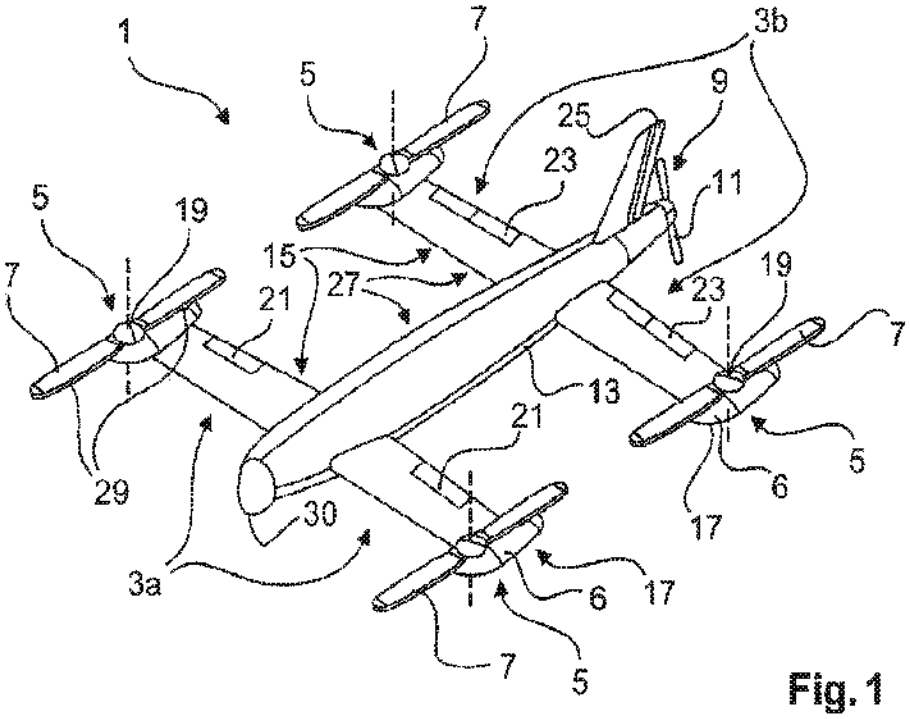
1
7
3b
5
9
25
23
11
5
19
15
27
19
7
21
23
7
13
21
5
29
6
30
17
3a
6
17
7
5

Fig. 1

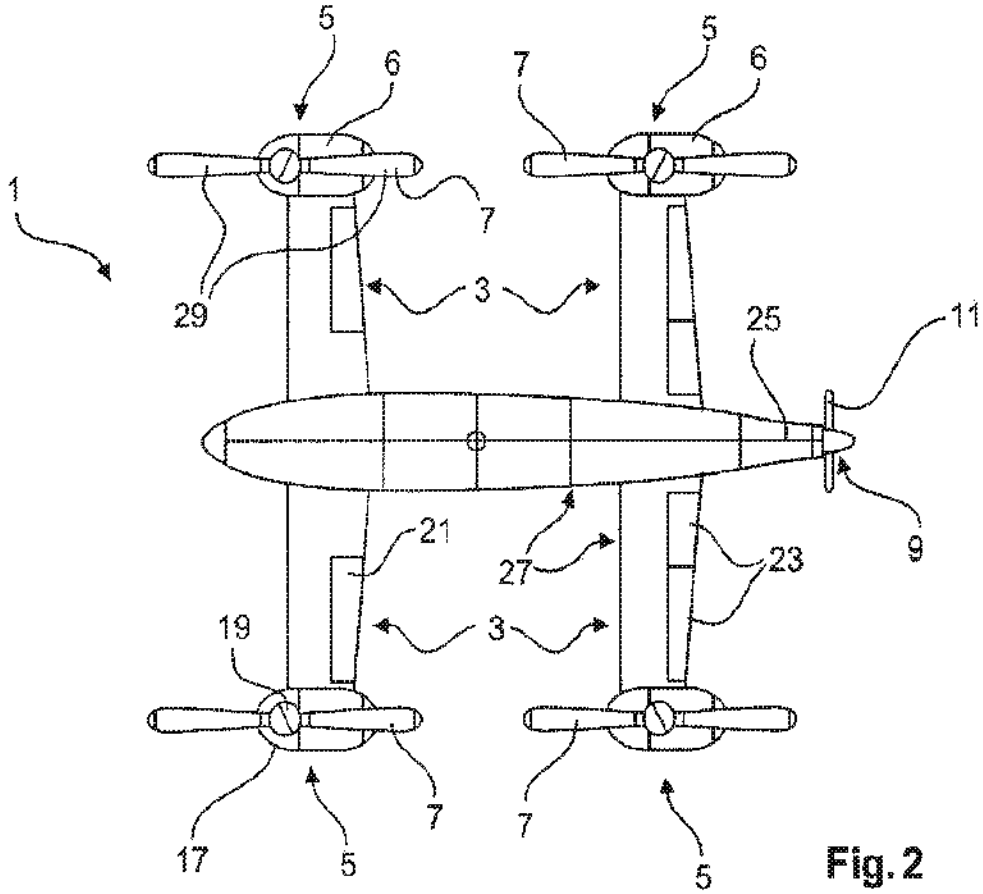
5
6
7
5
6
1
7
29
3
25
11
21
27
23
9
19
3
17
5
7
7
5

Fig. 2

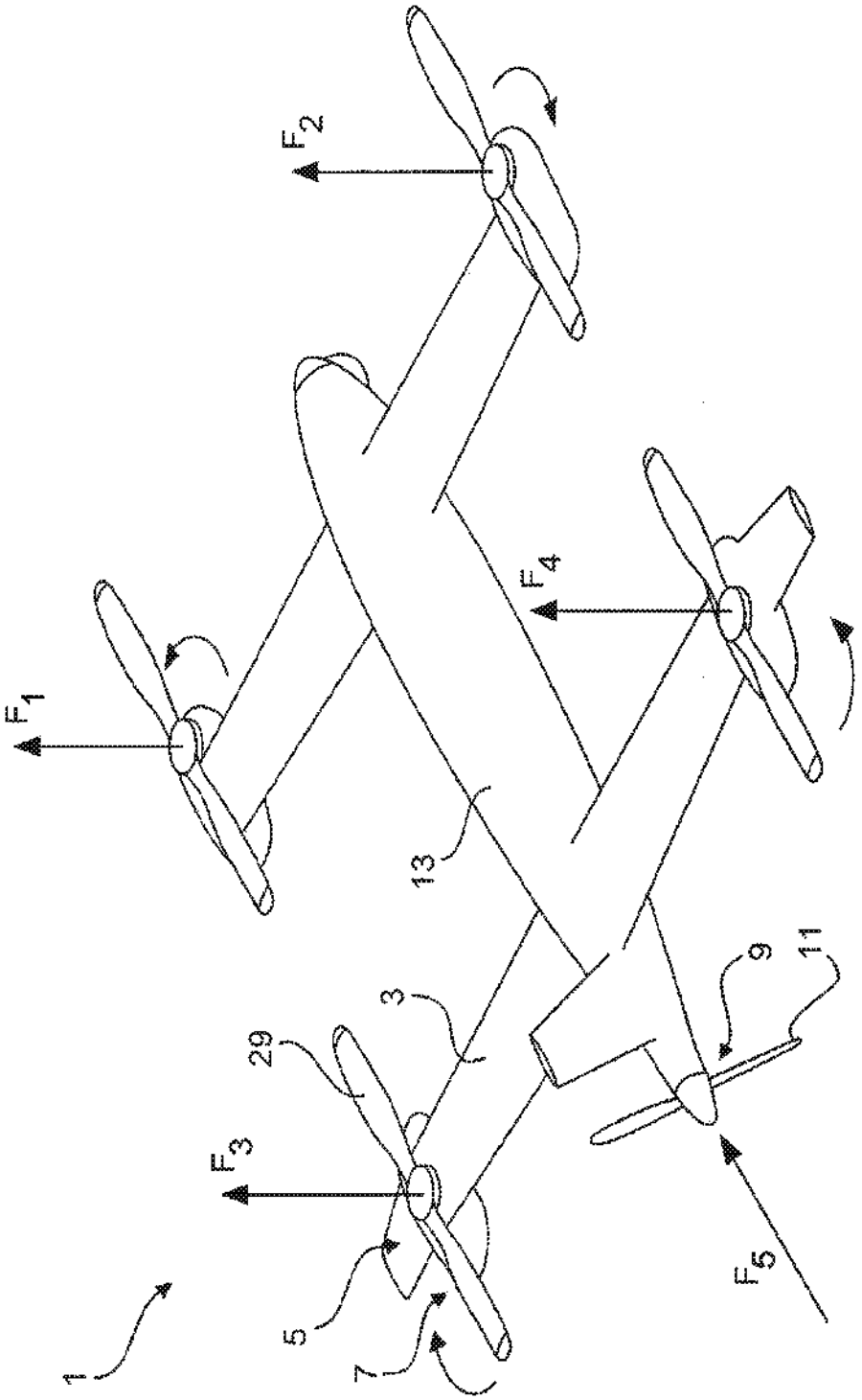

Fig. 3

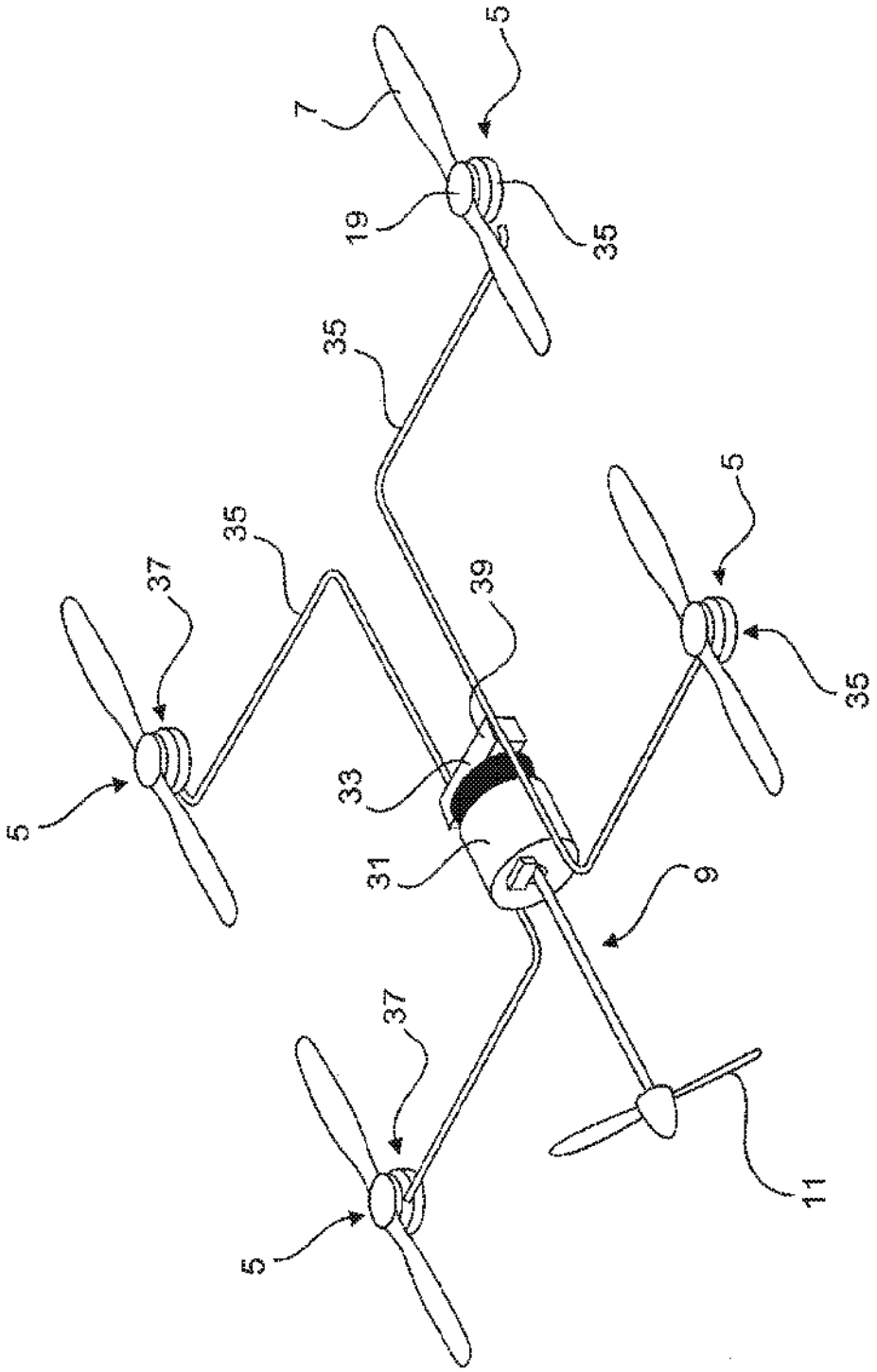

Fig. 4

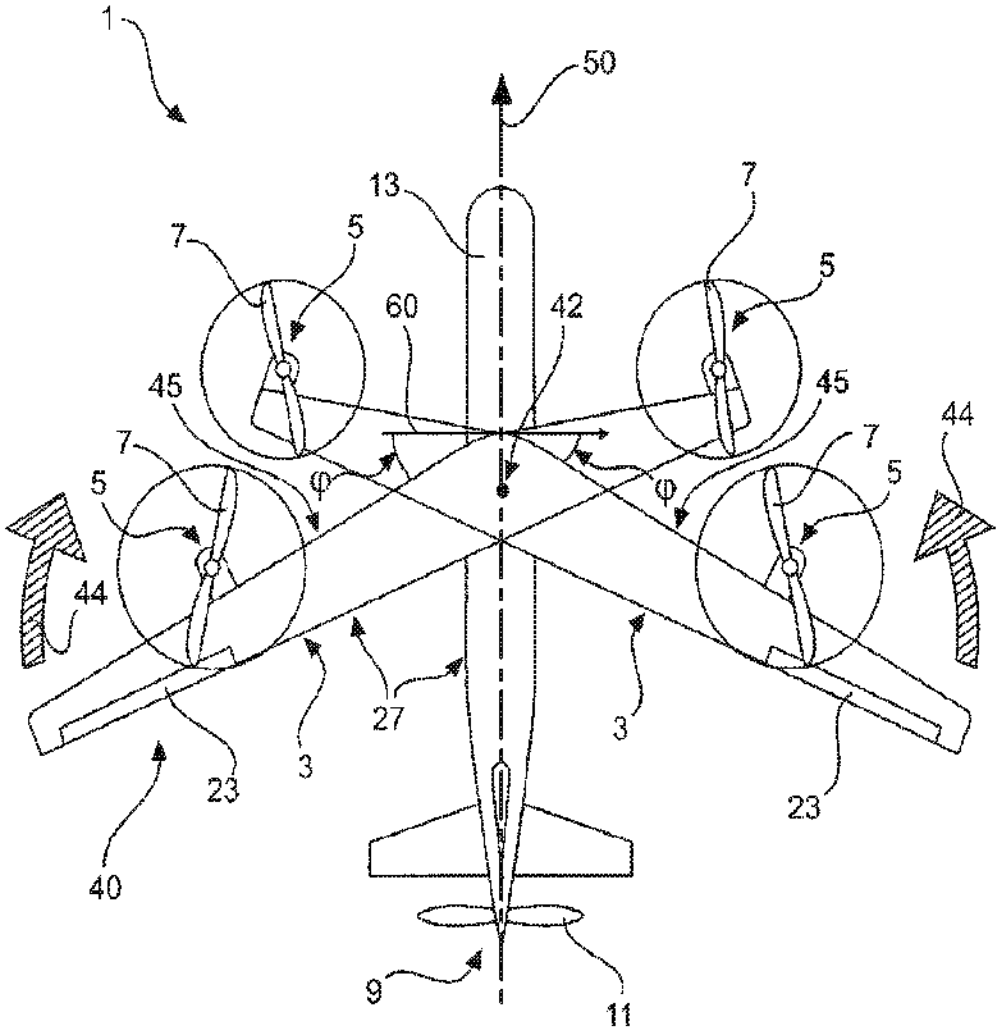

Fig. 5

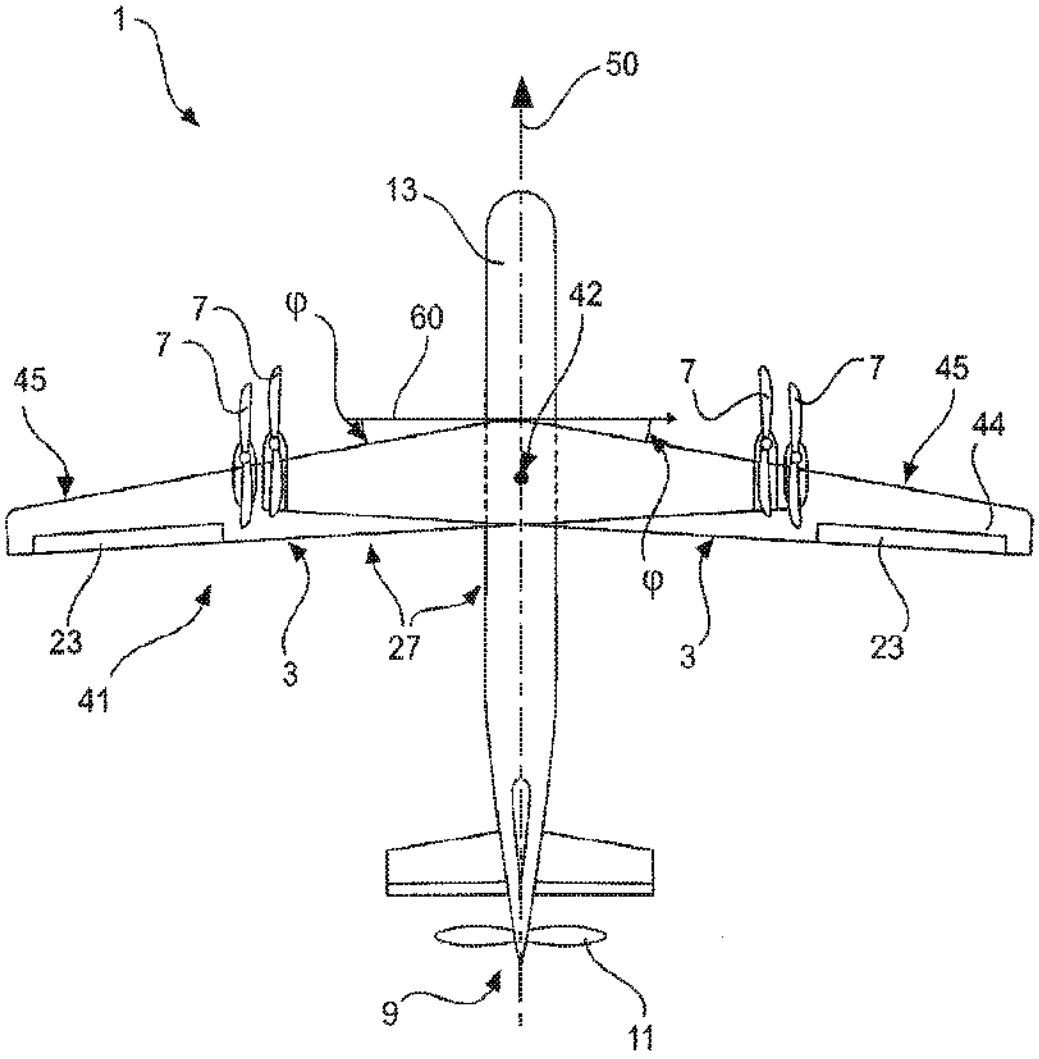

Fig. 6

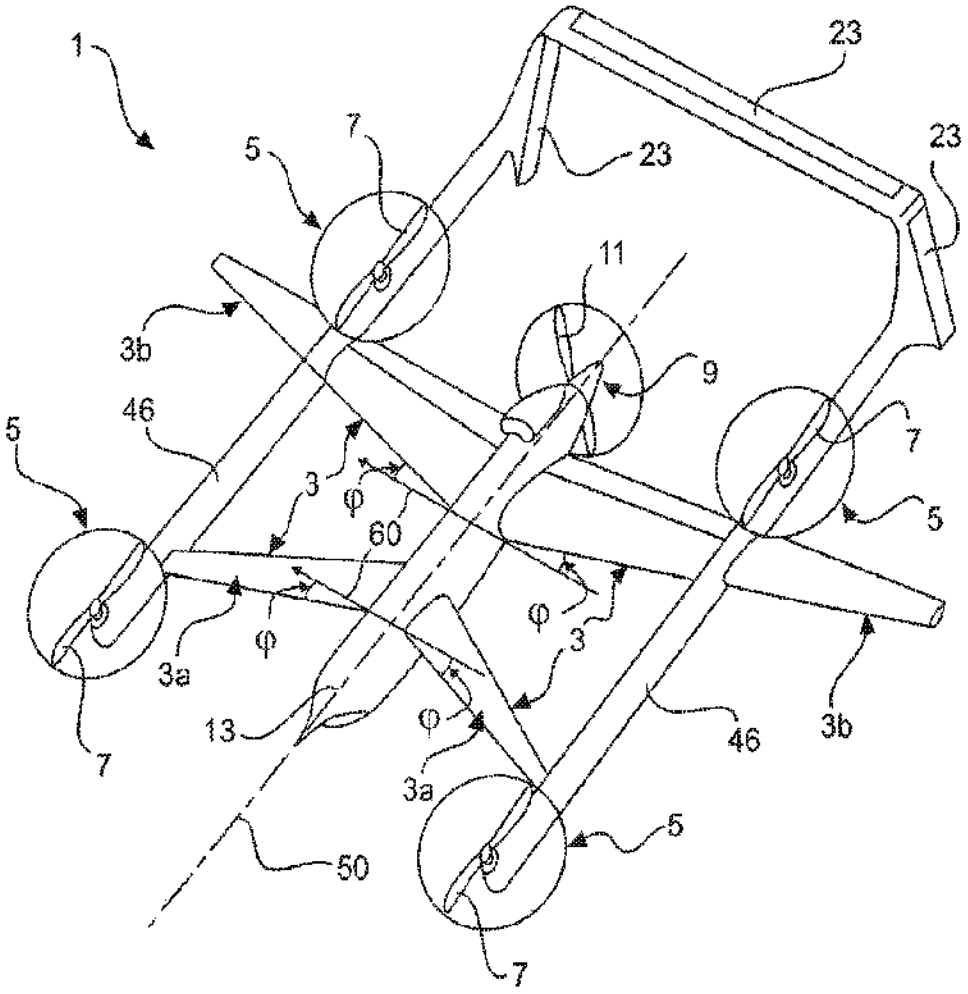

Fig. 7

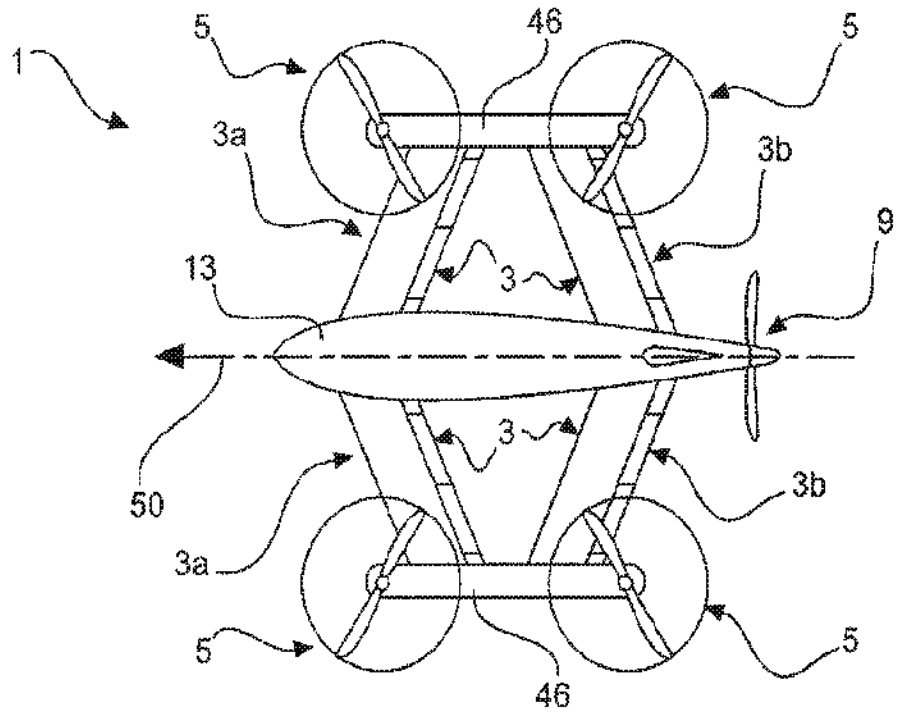

Fig. 8

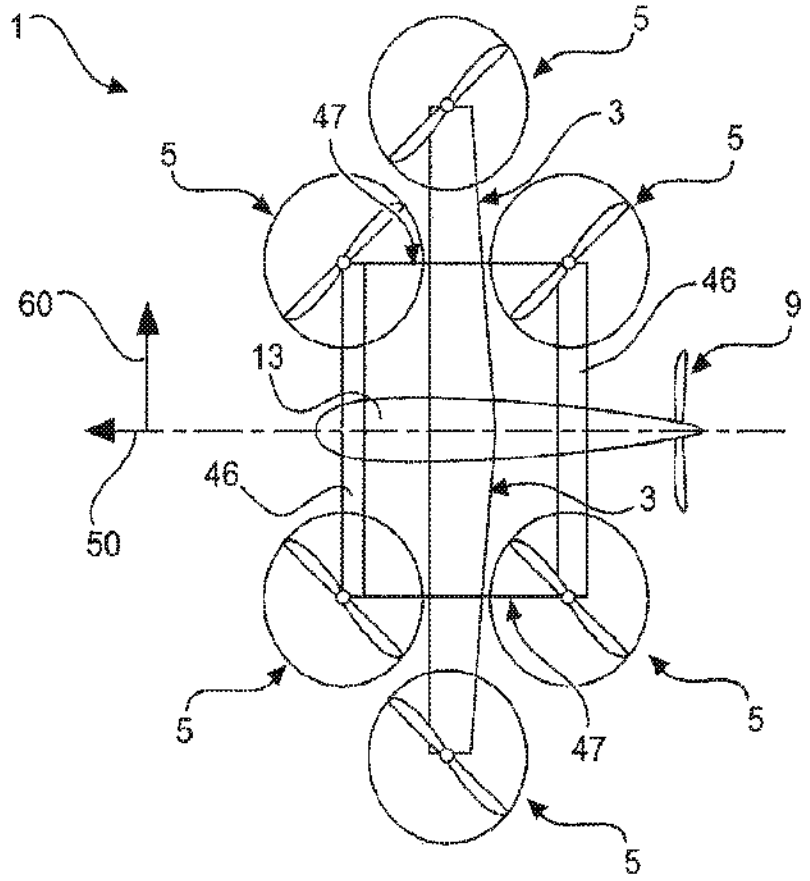

Fig. 9

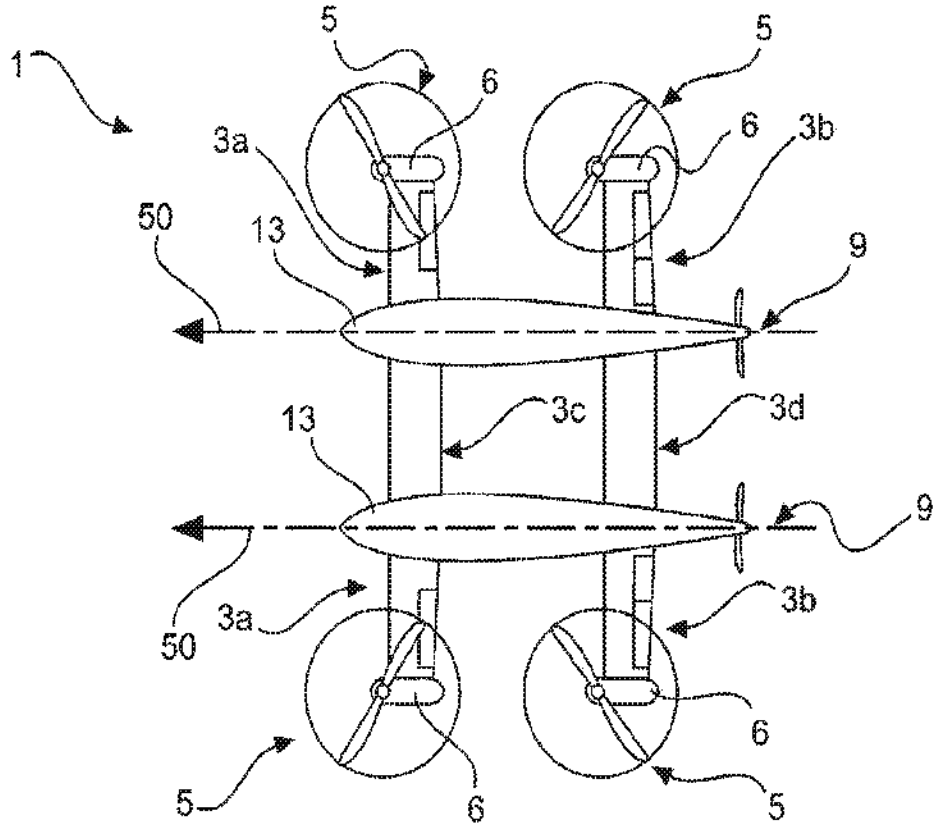
1
5
6
5
6
3a
3b
50
13
9
13
3c
3d
9
50
3a
3b
6
5
6
5

Fig. 10

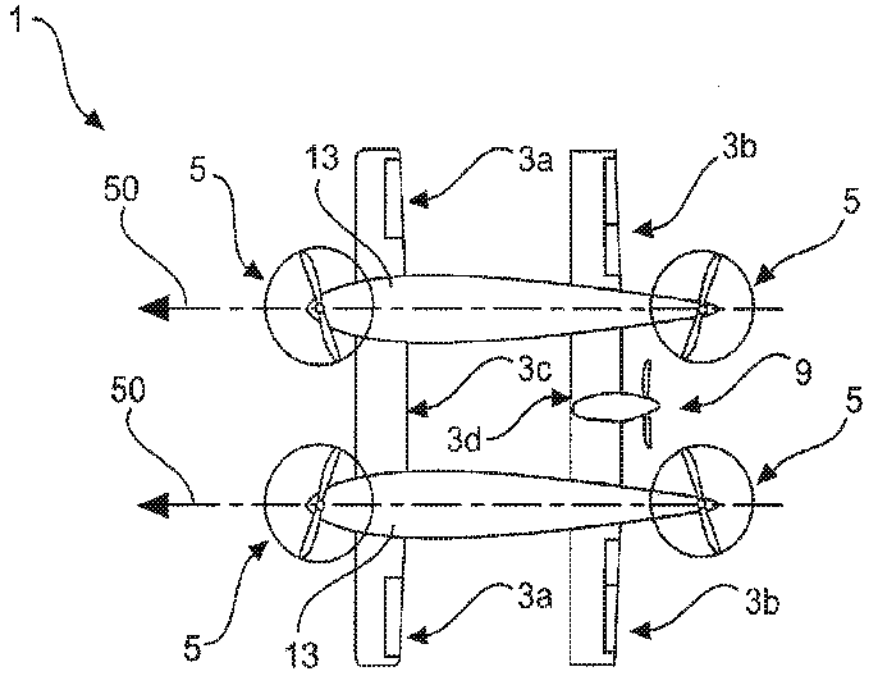
1
13
3a
3b
50
5
5
3c
9
50
3d
5
5
13
3a
3b

Fig. 11

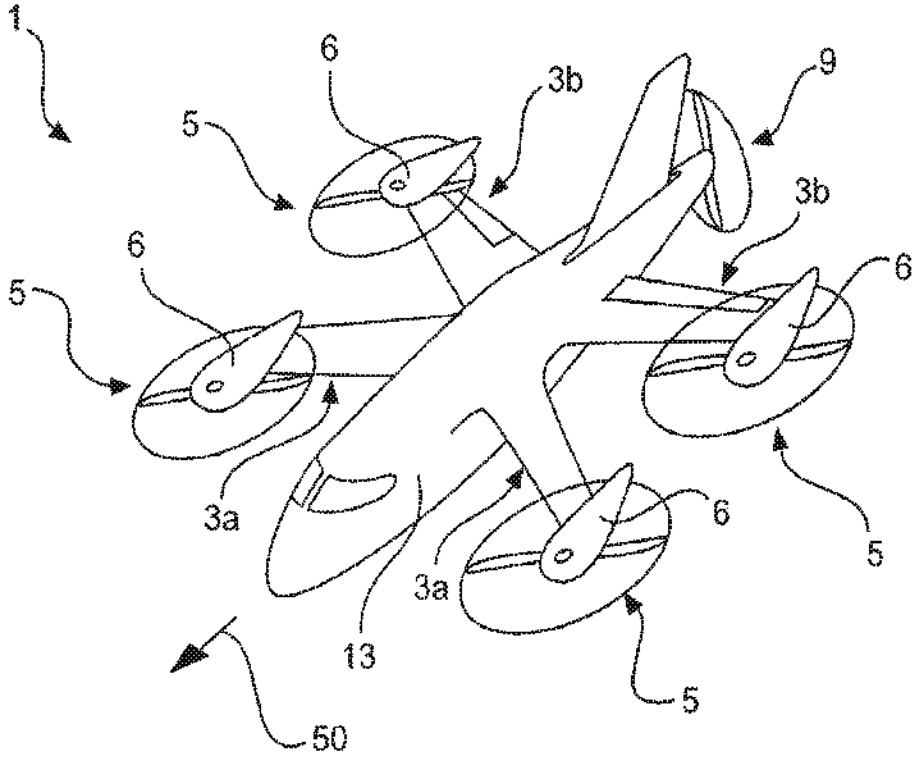

Fig. 12

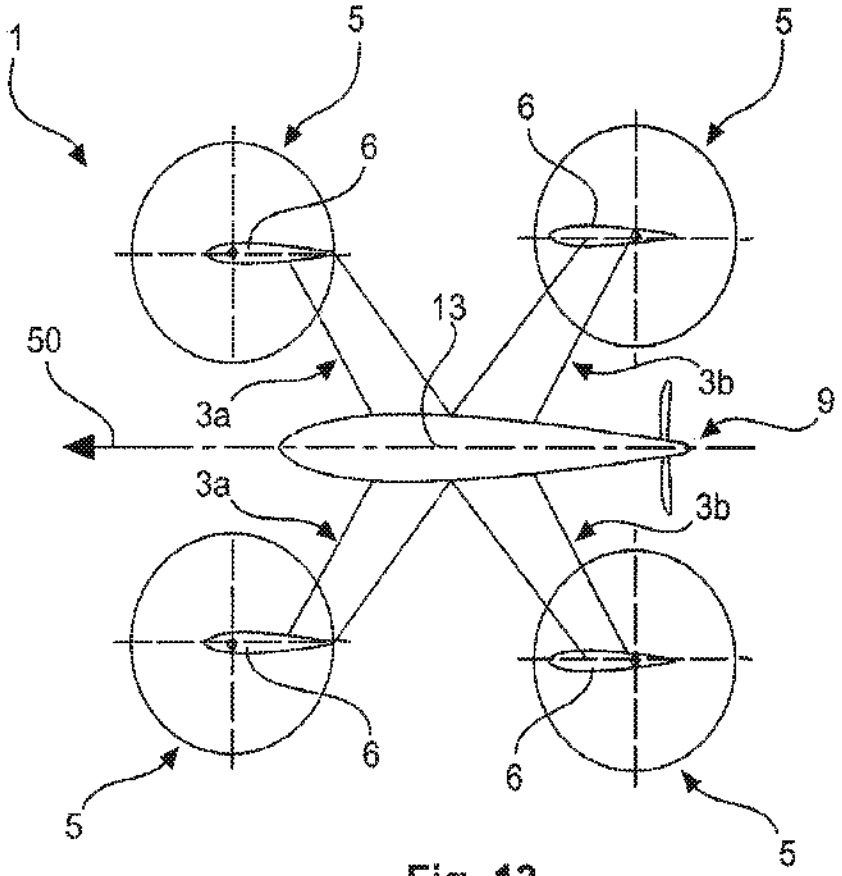

Fig. 13

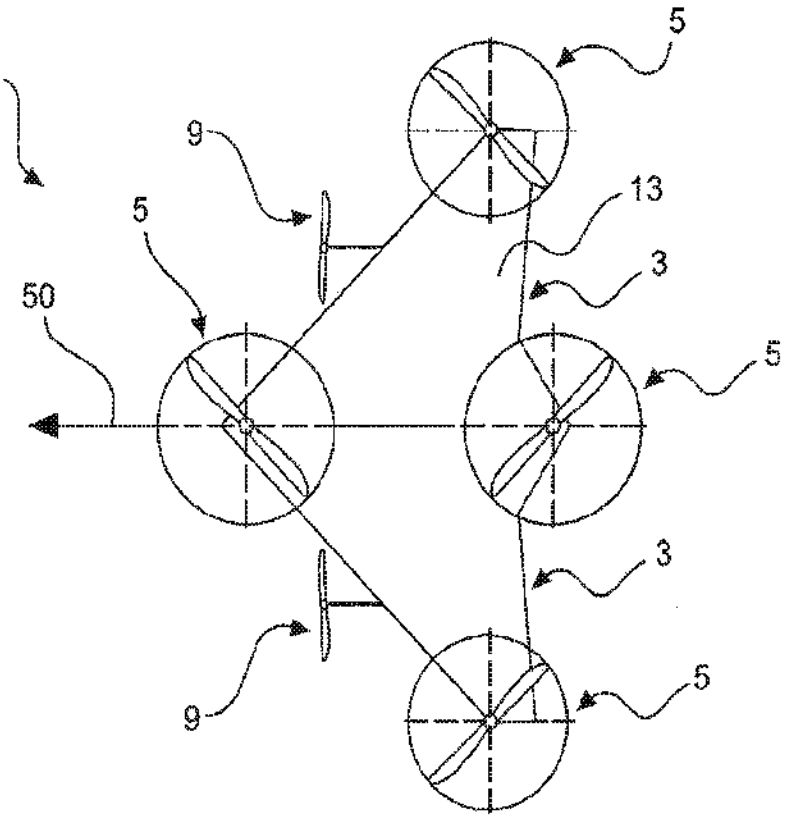

Fig. 14

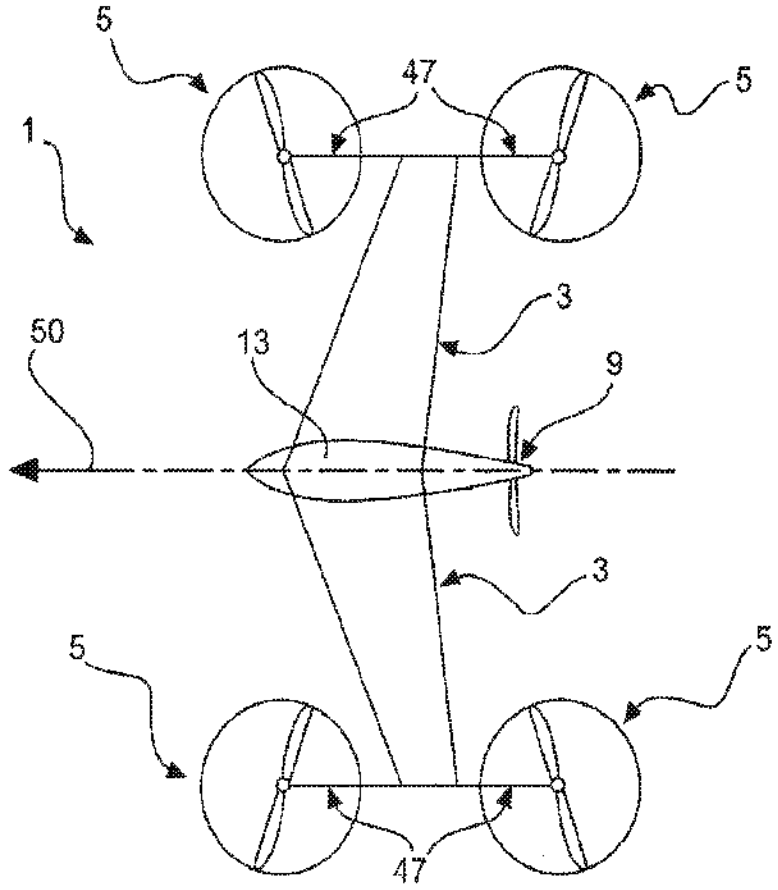

Fig. 15

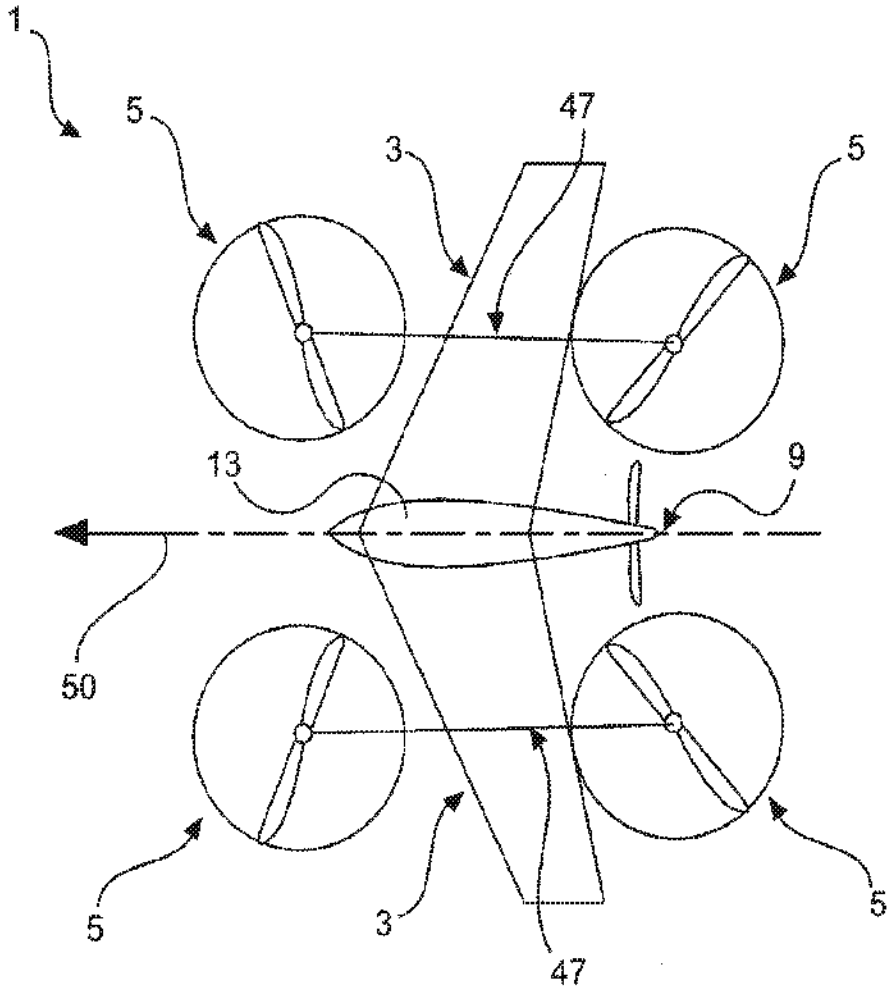

Fig. 16

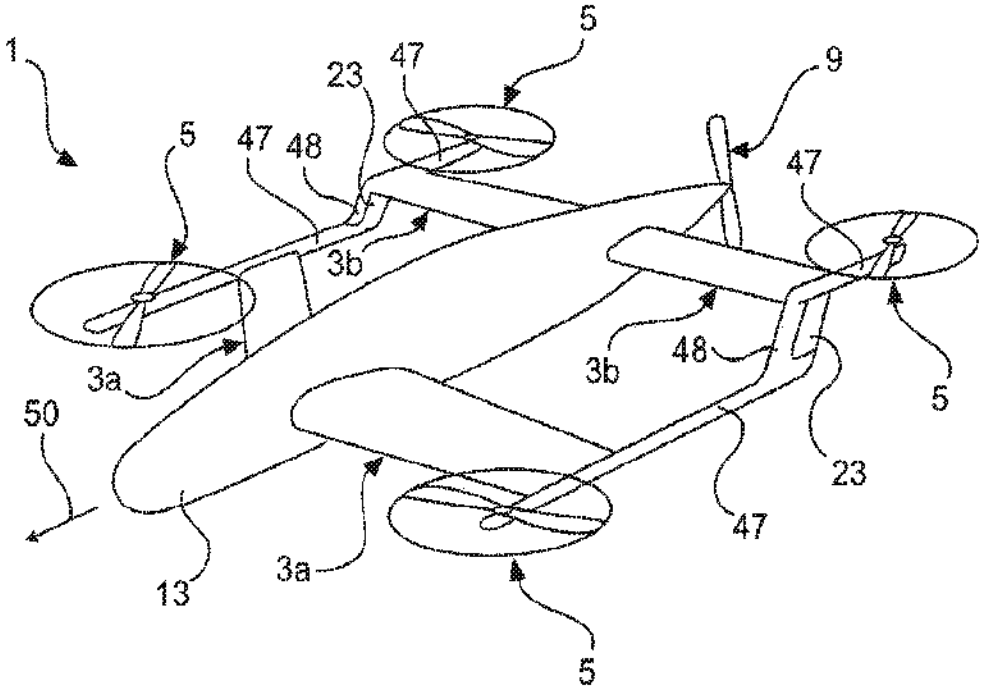
1
5
47
23
9
5
47
48
47
3b
3a
3b
48
5
50
23
47
13
3a
5

Fig. 17

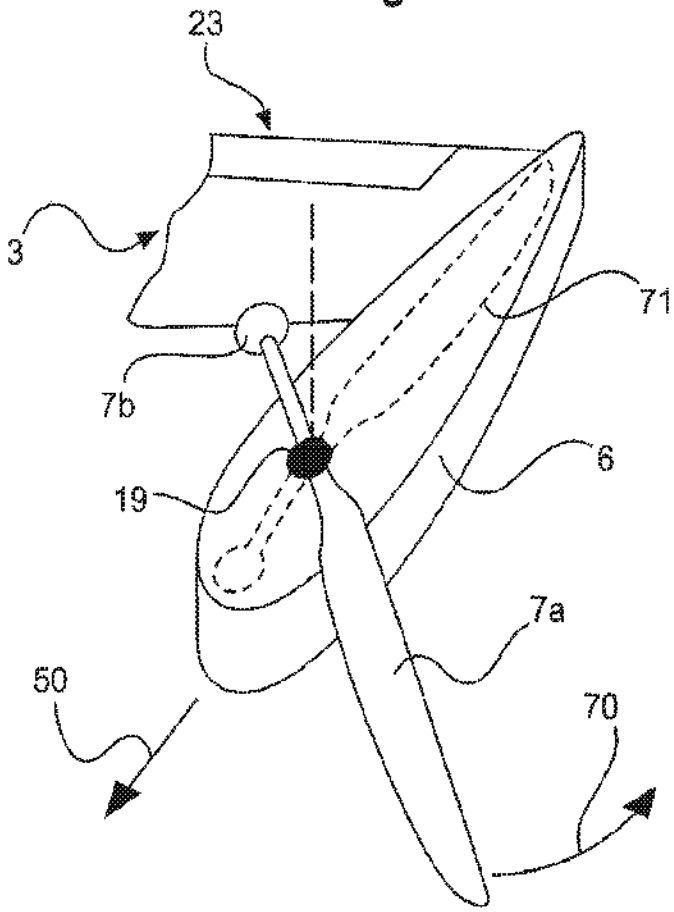
23
3
71
7b
6
19
7a
50
70

Fig. 18

AIRCRAFT CAPABLE OF VERTICAL TAKE-OFF

CROSS REFERENCE TO RELATED APPLICATIONS

[0001] The present application is a National Stage of International Application No. PCT/EP2014/068410, filed Aug. 29, 2014, which claims the priority of German patent application No. 10 2013 109 392.2. filed on 29 Aug. 2013, the entire disclosures of which is hereby incorporated by reference.

FIELD OF THE INVENTION

[0002] The present invention relates to an aircraft capable of vertical take-off, for example similar to a tricopter or a quadcopter.

BACKGROUND OF THE INVENTION

[0003] For many uses, it is desirable to have available an aircraft which can take-off from a very small surface and which therefore does not require a specific large airport for example. Furthermore, for particular purposes of use, an aircraft is required which is agile, which can be maneuvered precisely and which can preferably hover on the spot and, in this respect, can have good hover flight characteristics.

[0004] For example, aircraft are used for aerial surveillance and aerial reconnaissance, which aircraft hover above an object of interest and while so doing are able to record aerial images, for example. In an alternative use, an aircraft capable of vertical take-off, sometimes also called VTOL (vertical take-off and landing), can be used to approach territories which cannot be easily accessed by people or miscellaneous machines, for example as part of a disaster management intervention, to be able to transport goods, such as tools, food or medicines, into such territories.

[0005] Aircraft have been developed for such uses, inter alia, in which at least three, preferably four or more rotors fitted with a propeller and a motor driving said propeller respectively provide a substantially vertically upwardly directed thrust to thereby allow the aircraft to be able to take off vertically or to hover. An aircraft provided with four rotors of this type is also known as a quadcopter, quadrocopter, quadricopter, quadrotor or hover platform. Aircraft of this type having more than three thrust-providing rotors are generally known as multicopters and, in addition to quadcopters, variants with three rotors (tricopters), six rotors (hexacopters) or eight rotors (octocopters) are also common. Aircraft of this type are generally operated unmanned and thus can be small. These aircraft are sometimes also called drones.

[0006] By slightly inclining the entire aircraft or one or more rotors out of the horizontal, it is possible in aircraft of this type to also provide a particular propulsion in which a thrust generated by the rotors is inclined out of the vertical. However, cruising speeds which are achievable in this manner are restricted to relatively low speeds of typically less than 200 km/h, often even less than 100 km/h, due to physical boundary conditions which arise in this type of aircraft. A speed restriction of this type results, for example from the physical boundary condition that the propellers used for lift are operated at high rotational speeds, and therefore a propeller blade moving forwards in the direction of flight of the aircraft must move almost at sonic speed at least at the tips of the propeller blade even at relatively low cruising speeds, as a result of which a high air resistance and a loud noise are generated.

[0007] Therefore, although conventional multicopters have good hover characteristics like helicopters in which only a single rotor provides the necessary lift and complicated rotor mechanics can be used together with a tail rotor for maneuvering the helicopter, they usually only achieve relatively low cruising speeds.

[0008] KR 10 2012 006 05 90 A discloses a quadrocopter which can take off and land vertically and in which a thrust direction can be varied by propellers to be able to provide not only lift, but also propulsion for the quadrocopter.

SUMMARY OF THE INVENTION

[0009] It can be considered as an object of the present invention to provide an aircraft which allows both good hover characteristics and high cruising speeds.

[0010] According to one aspect of the present invention, an aircraft is proposed which has a support structure, a wing structure, at least three lifting rotors and at least one thrust drive. The wing structure is attached to the support structure. The wing structure can also be part of the support structure of the aircraft. The wing structure is configured to generate a lifting force for the aircraft during horizontal motion of the aircraft and for this purpose has at least one aerofoil which is provided with a profile generating dynamic lift. Each of the lifting rotors is attached to the support structure. Each lifting rotor has a propeller and is configured to generate a lifting force, acting vertically, for the aircraft by rotation of the propeller. The thrust drive is configured to generate a thrust, acting horizontally, on the support structure.

[0011] In short, one idea underlying the invention can be seen, inter alia, in fitting an aircraft in the form of a multicopter on the one hand with at least three lifting rotors which generate a vertical thrust, by which the aircraft can take-off and land vertically and can also hover, and also on the other hand in providing a thrust drive which can generate a horizontally acting thrust so that the aircraft can be accelerated to a high cruising speed independently of the lifting rotors after the rotors have stopped. The aircraft is also provided with a wing structure in which at least one aerofoil provides dynamic lift when the aircraft has been accelerated to a sufficiently high cruising speed.

[0012] The aerofoil or aerofoils of the wing structure are preferably configured such that they alone can provide adequate lift for the aircraft at cruising speeds to be achieved by the aircraft and it is thereby possible to dispense with a lift generated by the lifting rotors at cruising speed.

[0013] The aerofoils can be attached swivelably or rotatably, for example, to the support structure or to a fuselage so that during a hover state or while hovering, they are in a swivelled-out state and while cruising, they are in a swivelled-in state. In this respect, the swivelling-out of the aerofoils increases the sweep of the wing structure and the swivelling-in reduces the sweep. The sweep describes an angle between a leading edge of the respective aerofoil and a transverse axis of the aircraft. With regard to the direction of flight, it is possible to differentiate between negative sweep, i.e. forwardly swept aerofoils, and positive sweep, i.e. backwardly swept aerofoils. This connection will be explained in more detail in the description of the drawings.

[0014] Furthermore, configurations of the aircraft with three aerofoils or pairs of aerofoils can be provided. The

aerofoils can also be interconnected by connecting structures or connecting elements, as is the case for coleopters, for example. The propellers can be attached to the connecting structures or connecting elements by arms or nacelles. The propellers are preferably attached to the aerofoils, to the support structure, to arms, connecting structures, connecting elements or to nacelles.

[0015] An aircraft according to the invention, which is provided with a combination of at least three lifting rotors and at least one thrust drive as well as a suitably configured wing structure, can have the desired good hover characteristics and can also achieve high cruising speeds. For example, during take-off or landing or during hover flight, i.e. when there is a lack of or only slight horizontal speed of the aircraft, the lifting rotors can provide the necessary lift. Independently of the lifting rotors, the thrust drive can accelerate the aircraft in the horizontal direction and, with adequately high horizontal speeds, a dynamic lift generated by the at least one aerofoil of the wing structure can be high enough to support the aircraft.

[0016] The individual components of the proposed aircraft can be configured and controlled relatively simply. In particular, the lifting rotors can be configured such that a plane of rotation, in which rotor blades of a lifting rotor rotate, is stationary relative to a motor-driven shaft of the lifting rotor.

[0017] In other words, the lifting rotors of the aircraft can be of a simple mechanical construction and, for example, a simple propeller can be directly coupled to a motor-driven shaft. In particular, it is unnecessary to connect rotor blades of the lifting rotor to a motor-driven rotor shaft by a complicated mechanism, for example by a swash plate as in the case of a helicopter. In particular, it is unnecessary to change an angle of incidence or inclination angle of individual rotor blades during a rotor revolution in order to thus also provide propulsion of the aircraft or rolling, pitching or yawing of the aircraft. Instead, propulsion of the proposed aircraft can be achieved by the additional thrust drive. Rolling, pitching or yawing of the aircraft can be achieved by varying the lifting forces respectively generated by the usually at least four lifting rotors.

[0018] In a particularly simple configuration, the propeller blades of a lifting rotor can be rigidly connected to the rotor shaft. A propeller provided thus with rigid blades has no movable parts. It is thus robust and, for example, does not require any mechanism or control means to be able to control a variable arrangement of propeller blades. In particular, the propeller can be integral. The lifting force generated by a simply constructed lifting rotor of this type mainly depends on the rotation speed or speed at which the propeller is driven and can thus be simply controlled by a suitable control of the driving motor.

[0019] Alternatively, the lifting rotor can be more complex and propeller blades of the lifting rotor can be connected swivelably to the rotor shaft such that a pitch of the propeller blades can be varied.

[0020] In other words, an angle which is included by the propeller blades with the plane of rotation in which the propeller blades rotate can be varied. Varying the pitch of the propeller blades in this way can preferably be carried out for all the propeller blades together. In particular, the pitch of the propeller blades can be varied irrespective of a current position of the rotating propeller blades, i.e. the propeller blades are not varied in their pitch during a revolution, as with a swash plate in the case of a helicopter, but the pitch of the propeller blades remains substantially constant during a revolution. This type of relatively slow variation in the pitch of the propeller blades can be realized simply and by means of a robust mechanism.

[0021] Varying the pitch of the propeller blades can influence the thrust of the lifting rotor and hence the lifting force generated thereby, without necessarily having to change the rotational speed of the propeller. A lifting propeller of this type provided with jointly swivellable propeller blades is also known as a variable pitch propeller.

[0022] In principle, it can suffice to fit the proposed aircraft with only three lifting rotors. In this respect, each of the lifting rotors should be separately controllable, i.e. it should be possible to vary a thrust generated by one of the lifting rotors independently of the other lifting rotors. The at least three lifting rotors are attached to the aircraft in positions which together clearly span a plane, i.e. the lifting rotors should not be arranged linearly in tandem along a common straight line. By appropriately controlling the three lifting rotors to generate different lifting forces, the plane spanned by the lifting rotors and thereby the entire aircraft can be tilted.

[0023] As long as the lifting rotors are oriented such that the sum of the thrusts which they have generated acts substantially vertically downwards, the aircraft can hover in a stationary manner and the flight altitude of the aircraft can be varied by varying the strength of this total thrust. If, starting from a hover flight of this type, the thrust generated by individual lifting rotors is changed, this can mean that the total thrust acting on the aircraft no longer acts vertically downwards. Consequently, the aircraft can tilt forwards, backwards or to one side and can gain momentum or start to roll forwards or backwards.

[0024] If the proposed aircraft is restricted to only three lifting rotors, it is possible to save components and thereby to reduce weight. However, in general it is difficult with only three lifting rotors to allow the aircraft to rotate about its vertical axis, i.e. to yaw.

[0025] Therefore, it can be advantageous to fit the proposed aircraft with at least four lifting rotors, similarly to the case of a quadcopter. The four lifting rotors can preferably be controlled independently of one another. Since the position or inclination of the aircraft can already be determined by the thrust generated by just three lifting rotors, providing an additional fourth lifting rotor presents the possibility of also allowing the aircraft to yaw. The aircraft can thus be brought into any desired position and flight direction by appropriately controlling the four lifting rotors. An aircraft of this type with four or more lifting rotors can also be maneuvered in a precise and agile manner, in addition to having good hover characteristics.

[0026] The proposed aircraft is to have a support structure and a wing structure. The support structure is to provide structural strength to the aircraft so that both the wing structure and the lifting rotors can be attached in a stable manner to the aircraft. The wing structure is to be able to provide dynamic lift by means of suitably configured aerofoils when the aircraft adopts a sufficiently high cruising speed.

[0027] It should be noted that the fact that two separate terms are used for the support structure and the wing structure does not mean that the functions to be performed by the support structure and by the wing structure do not necessarily have to be performed by separate actual structures. For example, functions of the support structure and functions of the wing structure can be performed by different structural components of the proposed aircraft or even by the same

structural components of the aircraft. As an example, a wing of an aircraft can simultaneously function as an aerofoil generating a dynamic lift and thereby as part of a wing structure and it can also mechanically interconnect other components of the aircraft and can thus function as part of a support structure. For example, the wing can have an outer skin which provides a profile of an aerofoil formed thereby and is thus part of the wing structure. At the same time, the wing can have inner components such as struts which provide a mechanical strength and to which, for example, the wing skin is attached so that these can serve as a support structure.

[0028] In an advantageous embodiment, the support structure together with the wing structure is configured as a tandem wing structure. Provided in a tandem wing structure of this type is at least one elongate fuselage, from which two pairs of aerofoils arranged horizontally in tandem project transversely.

[0029] In a tandem wing structure of this type, the fuselage together with supporting structures in the projecting pairs of aerofoils can serve as a support structure. One of the lifting rotors can be respectively arranged on each of the aerofoils. If, for example, two pairs of aerofoils are provided, the first pair of aerofoils and the second pair of aerofoils can have a different sweep. If the first pair of aerofoils has a negative sweep and the second pair of aerofoils has a positive sweep, a plan view of the aircraft can give the impression of an x-shaped arrangement of the aerofoils. Furthermore, the aspect ratio can be increased by attaching wing tip extensions to the aerofoils which have already been integrated into the support structure, thereby increasing the wingspan of the wing structure or of the pairs of aerofoils. A person skilled in aircraft construction understands "aspect ratio" as meaning the ratio of the square of wingspan of both aerofoils and of the wing area which is revealed in a plan view of the aircraft.

[0030] The two pairs of aerofoils of a tandem wing structure can also be arranged, for example, offset relative to one another along the vertical axis of the aircraft, i.e. in a z direction.

[0031] It is pointed out that a plurality of elongate fuselages can also be provided as part of a support structure. For example, two elongate fuselages are arranged next to one another parallel to the direction of flight and are interconnected by at least one further aerofoil or by a further pair of aerofoils.

[0032] The lifting rotors are thus arranged distributed in a planar manner over the aircraft and can thereby provide good hover characteristics. The lifting rotors can preferably be respectively arranged in end regions of the aerofoils, i.e. laterally approximately at a maximum distance from the fuselage. Furthermore, the four aerofoils of the two pairs of aerofoils arranged in tandem can respectively provide a dynamic lift at an adequate cruising speed. The aerofoils and the lifting rotors can be configured such that they produce approximately identical lifting forces in hover flight or at a desired cruising speed. The support structure of the aircraft can be suitably configured and dimensioned to be able to absorb lifting forces of this type. Accordingly, the support structure can be optimized in respect of its strength and weight.

[0033] A nacelle, on which respectively one of the lifting rotors is arranged, can be positioned on each of the aerofoils. For example, a motor for the rotor can be accommodated in the nacelle. The nacelle can be configured to be aerodynamically efficient with regard to a rotor-generated air flow and/or with regard to an air flow while cruising.

[0034] In particular, a tail unit or rudder can be arranged on each of the aerofoils. By means of such tail units or rudders, the lift generated by the tandem wing structure can be appropriately influenced, for example during acceleration to cruising speed and as a consequence thereof during successive throttling of the lifting rotors.

[0035] In an alternative embodiment, the support structure together with the wing structure can be configured as an elongate fuselage with only two transversely projecting aerofoils, similarly to a conventional aircraft. In this respect, one of the lifting rotors can be respectively arranged on each of the aerofoils and at least one further lifting rotor, preferably two further lifting rotors can be respectively arranged on the ends of the fuselage.

[0036] In a further alternative, the support structure together with the wing structure can be configured as a flying wing structure. In such a flying wing structure, the entire support structure and the entire wing structure are formed by a single aerofoil-shaped wing with inner, mechanically stabilizing supporting components. In this respect, the wing can have a swept form in a plan view. The lifting rotors and the thrust drive can be arranged in suitable regions of this type of flying wing structure.

[0037] Furthermore, it can be advantageous particularly in the case of an aircraft which is configured with this type of flying wing structure, but also in the case of the aircraft described above with a tandem wing structure or with a structure similar to a conventional aircraft, to expand the support structure around projecting nacelles to which the lifting rotors and/or the thrust drive can be attached.

[0038] Particularly in the case of an aircraft which is configured with a tandem wing structure as described above, but also in the case of other configurations of the support structure and of the wing structure, it can be advantageous or even compulsory to configure and arrange the lifting rotors and to select the wing structure such that the sum of the thrusts which can be generated by the lifting rotors passes substantially through a center of gravity of the aircraft and a neutral point of the wing structure relative to the center of gravity of the aircraft is suitably positioned for horizontal flight. A stable hover flight can be achieved by this type of arrangement of the lifting rotors. A stable flight state can also be achieved in aerodynamic flight at cruising speed by an appropriate configuration of the wing structure.

[0039] The lifting rotors of the aircraft can be configured to stop respective propeller blades of a lifting rotor in a particular rotational position. This stopping of the propeller blades can be particularly advantageous when the aircraft moves horizontally at a high cruising speed, driven by the thrust drive, and when the aerofoils of the wing structure generate enough dynamic lift so that it is unnecessary for any further lift to be generated by the lifting rotors. In a flight situation of this type, it is advantageous to stop the propeller blades of the lifting rotors in a rotational position such that on the one hand they generate the lowest possible air resistance while cruising, and on the other hand the lowest possible forces, acting horizontally and/or vertically on the propeller blades due to the air flowing past the blades, are generated.

[0040] The propeller of a lifting rotor can have, for example, exactly two blades. Such a propeller has on the one hand a high efficiency and on the other low imbalances. Furthermore, such a propeller with two blades is particularly advantageous for the proposed aircraft because, during a cruising position, it can be stopped in a rotational position

such that the propeller extends parallel to the direction of flight. The arrested propeller generates minimal air resistance in such a rotational position.

[0041] However, a single blade propeller can also be provided. On an end projecting beyond its rotor shaft, the single blade propeller has a weight which acts as a counter-weight to the single blade propeller. For example, the single blade propeller can be part of a lifting rotor of the aircraft which contributes towards the lift of the aircraft in the hover state. For the cruising state, the single blade propeller can be oriented parallel to an elongate nacelle, so that when stationary, the single blade propeller is oriented substantially parallel to the flight direction or to the longitudinal direction of the aircraft. The single blade propeller and the nacelle are then oriented in alignment with one another, which reduces the air resistance while the aircraft is cruising. In turn, the nacelle can be attached to one end of an aerofoil.

[0042] In the proposed aircraft, the lifting rotors and the thrust drive are preferably driven by motors which can be controlled independently of one another. Due to motors of this type which can be controlled separately from one another, in the aircraft, lift generated by the lifting rotors on the one hand and propulsion generated by the thrust drive on the other can be controlled independently of one another. In particular, rolling or yawing of the aircraft to be produced by the lifting rotors can be controlled independently of the horizontal propulsion to be produced by the thrust drive. In this respect, with an increasing cruising speed, the lifting rotors can also be controlled accordingly for a reduced lift generation to take into account the dynamic lift produced by the aerofoil of the wing structure.

[0043] Each of the lifting rotors can preferably be driven by an electric motor. Electric motors can be controlled precisely and quickly in respect of their rotational speed so that the lift generated by a lifting rotor can be varied quickly and precisely to initiate or control particular flight movements of the aircraft. Particularly in the case of an aircraft similar to a multicopter, the precise and rapid control of the vertical thrusts generated by the individual lifting rotors can be important for safe, stable and, if required, effortlessly maneuvered flight characteristics.

[0044] In a specific embodiment of the proposed aircraft, the thrust drive can be driven by an internal combustion engine and the internal combustion engine can also be coupled to a generator to supply electrical energy for the electric motors provided on the lifting rotors. In the case of such an aircraft provided with a type of hybrid drive, the thrust acting in the horizontal direction can be produced by the internal combustion engine of the thrust drive. The internal combustion engine can be realized as a piston motor or as a jet engine or the like. Fuel for an internal combustion engine of this type can be carried in the aircraft in adequate quantities so that the thrust drive can be operated for relatively long periods of time and the aircraft can thus fly at cruising speed for a lengthy period of time, for example in order to reach a remote target. However, unlike the thrust drive, the lifting rotors are preferably driven by electric motors in order to be able to use the simpler and more precise controllability compared to an internal combustion engine during hover flight or during take-off or landing. The electrical energy for these electric motors can be provided by the generator coupled to the internal combustion engine, it being possible for the electrical energy to either be supplied directly by the generator to the electric motors or to be firstly stored in an electrical energy storage, such as in a battery, to then be released by the electric motors when required.

[0045] It is pointed out that possible features and advantages of the aircraft according to the invention are described herein with reference to different embodiments. A person skilled in the art will understand that the different features can be suitably combined or interchanged in order to arrive at further embodiments of the aircraft according to the invention.

[0046] In an alternative embodiment, the aircraft can have at least one aerofoil which is attached to the support structure such that it can swivel or rotate about a rotational axis. The rotational axis is oriented, for example, parallel to the vertical axis or to the yaw axis of the aircraft.

[0047] In an alternative embodiment, the aircraft has a second aerofoil which is attached to the support structure such that it can swivel about the rotational axis, the at least one aerofoil and the second aerofoil being in a swivelled-out state for hover flight.

[0048] Furthermore, the at least one aerofoil and the second aerofoil can be in a swivelled-in state for cruising, in which state leading edges of the aerofoils are oriented such that they are at least partly aligned with one another.

[0049] The support structure together with the wing structure can also be configured as a tandem wing structure with an elongate fuselage and two pairs of aerofoils which are arranged horizontally in tandem and project from the fuselage such that the first pair of aerofoils has a first sweep which differs from a second sweep of the second pair of aerofoils. In this respect, the sweep defines an angle between a transverse axis of the aircraft and the leading edge of the aerofoils.

[0050] In an alternative embodiment of the aircraft, the first pair of aerofoils and the second pair of aerofoils are connected by at least one connecting structure. The at least one connecting structure has an elongate form and is oriented parallel to the elongate fuselage. Furthermore, the at least one connecting structure can have a tail unit.

[0051] In an alternative embodiment, the first pair of aerofoils and the second pair of aerofoils are arranged vertically offset from one another. The vertical direction describes an axis parallel to the vertical axis or yaw axis of the aircraft and is oriented vertically, for example, to the transverse axis and to a longitudinal direction of the aircraft.

[0052] In a further alternative embodiment, the propellers of the lifting rotors are configured as single-blade propellers.

BRIEF DESCRIPTION OF THE DRAWINGS

[0053] In the following, embodiments of the present invention are described with reference to the accompanying drawings, although neither the drawings nor the description are to be construed as limiting the scope of the invention.

[0054] FIG. **1** is a perspective view of an aircraft according to the invention with a tandem wing structure.

[0055] FIG. **2** is a plan view of the aircraft from FIG. 1.

[0056] FIG. **3** is a perspective view of an aircraft according to the invention with forces acting thereon.

[0057] FIG. **4** shows a possible configuration of drives for an aircraft according to the invention.

[0058] FIG. **5** is a plan view of an aircraft according to the invention with two aerofoils in a swivelled-out state.

[0059] FIG. **6** is a plan view of an aircraft according to the invention with two aerofoils in a swivelled-in state.

[0060] FIG. **7** is a perspective view of an aircraft according to the invention with a tandem wing structure in which the aerofoils are swept.

[0061] FIG. **8** is a plan view of an aircraft according to the invention with a further tandem wing structure in which the aerofoils are swept.

[0062] FIG. **9** is a plan view of an aircraft according to the invention with six lifting rotors.

[0063] FIG. **10** is a plan view of an aircraft according to the invention with two mutually parallel elongate fuselages and two pairs of aerofoils on which lifting rotors are fitted.

[0064] FIG. **11** is a plan view of an aircraft according to the invention with two pairs of aerofoils and two mutually parallel elongate fuselages on which lifting rotors are fitted.

[0065] FIG. **12** is a perspective view of an aircraft according to the invention with a support structure which has two pairs of aerofoils with different sweeps.

[0066] FIG. **13** is a plan view of an aircraft according to the invention with a support structure which has two pairs of aerofoils with different sweeps.

[0067] FIG. **14** is a plan view of an aircraft according to the invention in which the fuselage is integrated into the aerofoils.

[0068] FIG. **15** is a plan view of an aircraft according to the invention with a support structure which has an elongate fuselage, a pair of aerofoils and lifting rotors attached to connecting elements.

[0069] FIG. **16** is a plan view of an aircraft according to the invention with a support structure which has an elongate fuselage, a pair of aerofoils and connecting elements which are arranged in the center of the aerofoils and to which lifting rotors are attached.

[0070] FIG. **17** is a perspective view of an aircraft with a support structure which has a fuselage, two pairs of aerofoils arranged in tandem in the longitudinal direction and two elongate connecting elements arranged parallel to the longitudinal direction.

[0071] FIG. **18** is a perspective view of an elongate nacelle, attached to an aerofoil, with a single-blade propeller.

[0072] The figures are merely schematic and are not true to scale. Identical reference signs in the figures identify identical or identically functioning features.

DESCRIPTION OF ADVANTAGEOUS EMBODIMENTS OF THE INVENTION

[0073] FIGS. **1** and **2** are a perspective view and a plan view of an aircraft **1** according to an embodiment of the present invention.

[0074] In the embodiment shown, the aircraft **1** has a tandem wing structure and, similarly to a quadcopter, one of four lifting rotors **5**, fitted with a propeller **7**, is arranged at both ends of each of the aerofoils **3**. The lifting rotors are arranged on nacelles **6** at the ends of the aerofoils **3**.

[0075] The aircraft **1** has a support structure **27** and a wing structure **15**.

[0076] The support structure **27** provides the aircraft **1** with the necessary mechanical strength, for example, to transfer forces generated by the lifting rotors **5** or by the aerofoils **3** between individual regions of the aircraft **1**. For this purpose, the support structure **27** has, for example, struts, stringers and formers which can form, inter alia, an elongate fuselage **13** as well as supporting parts of the aerofoils **3**. The support structure can also be used to hold a camera system **30**, for example,

[0077] The wing structure **15** forms, inter alia, the plurality of aerofoils **3** of the aircraft. Each of the aerofoils **3** of the wing structure **15** has a suitable profile to generate a lifting force onto the aircraft 1 by dynamic lift during horizontal motion of the aircraft **1**.

[0078] In the example shown in FIGS. 1 and **2**, the support structure **27** together with the wing structure **15** is formed as a tandem wing structure in which an elongate fuselage **13** is provided having two pairs of aerofoils **3** which are arranged horizontally in tandem and project transversely at the sides, approximately at a right angle from the fuselage **13**.

[0079] The aerofoils **3** of the wing structure **15** are configured and attached to the fuselage **13** in suitable positions such that a neutral point of the wing structure **15** relative to a centre of gravity of the aircraft **1** is in a suitable position for horizontal flight of the aircraft **1**. A neutral point of an aerofoil profile or of a wing structure having a plurality of aerofoil profiles can be understood as meaning a fixed point with constant torque in the region of moderate angles of incidence.

[0080] Tail units **21**, **23** in the form of flaps or rudders which can be used as elevators or horizontal tails at high cruising speeds in the horizontal direction similarly to a conventional aircraft can also be provided both on the aerofoils of a front pair of aerofoils **3***a* and on the aerofoils of a rear pair of aerofoils **3***b*. Furthermore, a rudder unit or rudder **25** can be provided on the tail of the fuselage **13**.

[0081] Provided at the ends or end regions of each of the aerofoils **3***a*, **3***b* is a respective lifting rotor **5** on a nacelle **6** so that the total of four lifting rotors **5** are arranged in a common plane and at the four corners of a virtual square.

[0082] Each of the lifting rotors **5** has a propeller **7** which can be driven in rotation by a rotor shaft **19** and a motor. The propeller **7** can be a rigid, preferably integral propeller so that a lift generated by the lifting rotor **5** can merely be varied by varying the rotational speed of the propeller **7**. Alternatively, the propeller **7** can be a variable pitch propeller in which propeller blades **29** can be varied in pitch and, in this manner, lift generated by the lifting rotor **5** can be varied even at a constant rotational speed.

[0083] As shown in FIG. **3**, each of the lifting rotors **5** is configured to generate a lifting force F1, F2, F3, F4. In this respect, the lifting rotors **5** should be positioned and oriented on the aircraft **1** such that the sum of the lifting forces generated thereby passes approximately through a center of gravity of the aircraft **1**, particularly when all the lifting rotors **5** are operated uniformly at the same time. The thrust which can be generated overall by the lifting rotors **5** should be sufficient to lift the aircraft **1** and to allow it to hover. Some of the lifting rotors **5** rotate in opposite directions, as indicated by arrows in FIG. **3**, so that the moments generated by the lifting rotors **5** substantially cancel each other out.

[0084] By varying the lifting forces F1, F2, F3, F4 generated by the individual lifting rotors **5**, it is possible to vary the magnitude and direction of the total thrust which is generated overall and which acts on the aircraft **1**, and in this manner the aircraft **1** can ascend or descend, can tilt forwards and backwards or to one side, or can rotate about a vertical axis of the aircraft, thereby making it possible to produce flight movements such as forwards flight, rolling and/or yawing.

[0085] Thus it is possible in principle with the proposed aircraft **1**, similarly to a quadcopter, for all flight movements to be realized by appropriately controlling the various lifting

rotors **5**. However, an achievable cruising speed at which the aircraft **1** can move horizontally is restricted here due to physical effects.

[0086] Therefore, to achieve high cruising speeds, the proposed aircraft **1** is additionally fitted with a thrust drive **9**, by which a thrust F5 acting in the horizontal direction (see FIG. **3**) can be produced.

[0087] In the example shown, the thrust drive **9** is formed by a thrust propeller **11**, driven by an additional motor, and is arranged on the tail of the fuselage **13**. However, the thrust drive **9** can also use other drive mechanisms, such as a jet engine. The thrust drive **9** should be adequately configured, i.e. it should allow adequate output power to enable the aircraft 1 to accelerate to high cruising speeds of, for example, up to 800 km/h.

[0088] In the aircraft **1** which has been accelerated by the thrust drive **9**, an increasing dynamic lift is generated on the profiled aerofoils **3** as the cruising speed increases. This dynamic lift helps to hold the aircraft **1** in the air so that the lifting forces F1, F2, F3, F4 generated by the lifting rotors **5** can be successively reduced until the aircraft **1** has reached an adequately high cruising speed in the horizontal direction at which the total lift for the aircraft required to maintain the flight altitude is generated by the aerofoils **3**.

[0089] The lifting rotors **5** can be stopped at such a cruising speed. It is provided in particular to stop the propellers **7** of the lifting rotors **5** in a position in which they generate the lowest possible air resistance and in which the lowest possible forces act on a propeller **7**.

[0090] In the example shown, the propellers **7** are fitted merely with two blades **29** for this purpose, so that the linearly extending propeller **7** can be oriented with its blades **29** in the flight direction while cruising and can be stopped in this orientation. Alternatively, it would also be conceivable to retract the propeller **7** while cruising or, while cruising, to lower the propeller **7** or the entire lifting rotor **5**, for example into a nacelle **17** provided on a respective end of an aerofoil to reduce the flow resistance.

[0091] FIG. **4** shows a possibility of an advantageous hybrid drive system for an aircraft 1 according to the invention.

[0092] Here, a main motor **31** is used to drive a thrust propeller **11**. Thus, together with the thrust propeller **11**, the main motor **31** forms the thrust drive **9** to generate the thrust F5 acting horizontally on the aircraft. The main motor **31** can be any type of motor capable of allowing sufficient power for horizontal flight at desired high cruising speeds. For example, the main motor **31** can be a diesel engine, a petrol engine, a Wankel engine, a gas turbine, a fuel cell-powered electric motor, etc.

[0093] In addition to the thrust propeller **11**, the main motor **31** also drives an electrical generator **33**. The generator **33** converts the mechanical drive energy provided by the main motor **31** into electrical energy and supplies this via lines **35** to a plurality of electric motors **37**. The electric motors **37** are part of the lifting rotors **5**, provided on the ends of the aerofoils, of the quadrocopter-like aircraft **1**. The electric motors **37** can respectively drive the propeller **7** attached thereto via a rotor shaft **19**. The torque acting on the propeller **7** and thus the rotational speed assumed by the propeller **7** can be varied very precisely and quickly by the electric motor **37**. To be able to electrically power and control the four electric motors **37**, an electronic power control **39** is provided in the generator **33**.

[0094] As an alternative to the hybrid drive system described above, the proposed aircraft **1** can also be operated by other drive systems. For example, the lifting rotors **5** can also be driven by internal combustion engines. Alternatively, it is possible to provide a central motor for the entire drive system and the plurality of lifting rotors can be coupled to this motor by power transmission shafts, it being optionally possible for couplings and/or gears to be provided in the associated drive trains. A lift to be generated by a lifting rotor **5** can be varied by changing the rotational speed and/or by changing an adjustable pitch of the propeller blades of the lifting rotor. Each of the lifting rotors **5** can also be driven by a separate electric motor, it being possible for the electric motors themselves to be driven by a main motor.

[0095] The described drive possibilities, such as the hybrid drive system, can be combined with all the embodiments described above and below. This is possible because in the described embodiments, at least one thrust drive **9** and at least three lifting rotors **5** are always provided.

[0096] FIG. **5** is a plan view of the aircraft **1** with a support structure **27** which has two aerofoils **3** which are swivellable relative to one another. In the configuration shown, the aircraft **1** is in a hover flight state **40** in which the aerofoils **3** are in a swivelled-out state. The aerofoils **3** are mounted such that they can swivel or rotate about a rotational axis **42**. The rotational axis **42** is arranged, for example, parallel to the vertical axis and/or yaw axis of the aircraft **1** and passes through the elongate fuselage **13** of the aircraft **1**. In a plan view, the aerofoils **3** respectively project beyond the elongate fuselage **13** so that the two aerofoils **3** intersect in the region of the rotational axis **42**. In other words, the left aerofoil extends beyond the elongate fuselage **13** on the right-hand side of the aircraft **1** and the right aerofoil extends beyond the elongate fuselage **13** on the left-hand side of the aircraft 1. In this respect, it is to be borne in mind that the left aerofoil of the fuselage **13** means the aerofoil positioned on the left-hand side in the direction of flight, the direction of flight describing the horizontal direction in which the thrust of the thrust drive **9** acts with the thrust propeller **11**. Analogously, the right aerofoil of the fuselage **13** means the aerofoil positioned on the right-hand side in the direction of flight. The part of the left aerofoil projecting on the right-hand side of the fuselage **13** can be smaller in terms of area than the part of the left aerofoil located on the left-hand side of the fuselage **13**. Analogously, the part of the right aerofoil projecting on the left-hand side of the fuselage **13** can be smaller in terms of area than the part of the right aerofoil located on the right-hand side of the fuselage **13**.

[0097] A wing leading edge **45** or aerofoil leading edge can be arranged inclined at a predetermined sweep angle ϕ to a transverse axis **60** of the elongate fuselage **13**. A person skilled in aircraft construction understands a transverse axis **60** as meaning an axis oriented vertically to the longitudinal direction **50** of the fuselage **13** and to the vertical axis of the aircraft. The sweep angle ϕ is measured, for example, between the transverse axis **60** of the fuselage **13** and the leading edge **45** of the aerofoil **3**. The sweep of the aerofoils **3** or the sweep angle ϕ can be adapted, for example, to the flight speed of the aircraft **1** during horizontal flight. For this purpose, during the transition from a hover flight state **40** to a cruising state, which will be described in detail below, the sweep angle ϕ can be continuously reduced. The arrows **44** show the movement of the aerofoils **3** during the transition from a hover flight state **40** into the cruising state, i.e. from the

swivelled-out state into a swivelled-in state. A locking of the aerofoils **3** in a particular sweep can be provided by an appropriate locking device for the aerofoils **3**. The transverse direction **60** of the elongate fuselage **13** can be oriented vertically to the rotational axis **42** and/or vertically to the horizontal direction. The horizontal direction is, for example, parallel to the longitudinal direction **50** of the elongate fuselage **13** of the aircraft **1**. The swivellable aerofoils each have two lifting rotors **5**, each of the lifting rotors **5** having a propeller **7**. In the swivelled-out state, the lifting rotors **5** are positioned and oriented on the aircraft **1** such that the sum of the lifting forces generated thereby passes approximately through the center of gravity of the aircraft **1**, particularly when all the lifting rotors **5** are operated uniformly at the same time. This allows a hover flight state **40** in which the aircraft **1** does not move, or moves only slightly, in the horizontal direction. For example, a lifting rotor **5** of the left aerofoil is fitted on the left-hand side of the fuselage **13** and a further lifting rotor **5** is fitted on the part of the left aerofoil projecting on the right-hand side of the fuselage **13**. Analogously, a lifting rotor **5** of the right aerofoil is fitted on the right-hand side of the fuselage **13** and a further lifting rotor **5** is fitted on the part of the right aerofoil projecting on the left-hand side of the fuselage **13**. During the transition from the hover flight state **40** to the cruising state, the rotational speed of the propellers **7** of the lifting rotors **5** can be continuously decelerated so that they are finally stationary in the cruising state.

[0098] FIG. **6** is a plan view of the aircraft **1** with a support structure **27** which has two aerofoils **3** which are swivellable relative to one another. In the configuration shown, the aircraft **1** is in the cruising state **41** in which the aerofoils **3** are in a swivelled-in state. In the cruising state **41**, the sweep angle ϕ is smaller than in the hover flight state **40**. In the swivelled-in state, the leading edge **45** of the left aerofoil can be oriented to align with the leading edge of the part of the right aerofoil projecting over the fuselage **13**. Analogously, in the swivelled-in state, the leading edge **45** of the right aerofoil can be oriented to align with the leading edge of the part of the left aerofoil projecting over the fuselage **13**. In the swivelled-in state, the propellers **7** of the lifting rotors **5** are stationary and are oriented such that, in the cruising state **41**, they generate the lowest possible air resistance. For example, the elongate propellers **7** are then oriented in their longitudinal direction parallel to the horizontal direction or longitudinal direction **50** of the fuselage **13**.

[0099] The sweep angle ϕ of the aerofoils **3** can be between 0 degrees and 90 degrees both in the swivelled-out state and in the swivelled-in state. A positive sweep is defined by a sweep angle ϕ of more than 0 degrees. A negative sweep is defined by a sweep angle ϕ of less than 0 degrees. If the sweep angle φ is equal to 0 degrees, there is no sweep. In the aircraft **1** according to the invention, both positive and negative sweeps of the aerofoils **3** are possible. The aerofoils **3** can also be unswept. A positive sweep and a negative sweep can be provided in all embodiments described above and below.

[0100] FIG. **7** is a perspective view of the aircraft **1** with a tandem wing structure. In this respect, the elongate fuselage **13** and two pairs of aerofoils **3**, arranged horizontally in tandem and projecting from the fuselage **13**, are formed. The first pair of aerofoils **3***a* has a negative sweep with a sweep angle ϕ of between 0 and −90 degrees and the second pair of aerofoils **3***b* has a positive sweep with a sweep angle ϕ of between 0 and 90 degrees. In the embodiment shown, the first pair of aerofoils **3***a* is arranged in front of the second pair of aerofoils **3***b*, bearing in mind the flight direction, so that a plan view of the aircraft **1** gives the impression of an x-shaped arrangement of the first pair of aerofoils **3***a* and of the second pair of aerofoils **3***b*. The first pair of aerofoils **3***a* and the second pair of aerofoils **3***b* are interconnected by connecting structures **46**. In this respect, the right aerofoil of the first pair of aerofoils **3***a* is connected to the right aerofoil of the second pair of aerofoils **3***b* by a connecting structure **46**. Analogously, the left aerofoil of the first pair of aerofoils **3***a* is connected to the left aerofoil of the second pair of aerofoils **3***b* by a further connecting structure **46**. Thus, two connecting structures **46** are preferably provided, but it is possible to provide any number of connecting structures **46**. One connecting structure **46** can be attached, for example, to one end of the left aerofoil of the first pair of aerofoils **3***a* and another connecting structure **46** can be attached, for example, to one end of the right aerofoil of the first pair of aerofoils **3***a*. The connecting structures **46** can have an elongate form and can be oriented parallel to the longitudinal direction **50** of the fuselage **13**. The connecting structures **46** can also be interconnected by a tail unit **23**. The tail unit **23** is, for example, a rudder unit or a horizontal tail or a combination of rudder unit and horizontal tail. The connecting structures **46** can be arranged such that the aerofoils of the second pair of aerofoils **3***b* intersect the connecting structures **46** and the aerofoils of the first pair of aerofoils **3***a* end in the connecting structures **46**. Furthermore, the connecting structures **46** can have lifting rotors **5** with propellers **7**. In this case, two lifting rotors **5** are attached in each case to both connecting structures **46**. The lifting rotors **5** are positioned and oriented on the aircraft **1** such that the sum of the lifting forces generated thereby passes approximately through the center of gravity of the aircraft **1**, particularly when all the lifting rotors **5** are operated uniformly at the same time. A respective lifting rotor **5** is attached to the connecting structures **46** in the region of the first pair of aerofoils **3***a* and a respective lifting rotor **5** is attached to the connecting structures **46** in the region of the second pair of aerofoils **3***b*. Due to the arrangement of the lifting rotors **5**, the aircraft **1** can be brought into a hover flight state **40**. Bearing in mind the flight direction of the aircraft **1**, the connecting structures **46** can project to beyond the thrust drive **9** fitted to the fuselage **13**, where the two connecting structures **46** are interconnected by the tail unit **23**. Thus, the connecting structures **46** oriented in the longitudinal direction **50** are interconnected by the first pair of aerofoils **3***a*, by the second pair of aerofoils **3***b* and by the tail unit **23**. The connecting structures **46** thus have no direct contact with the fuselage **13**, but are connected thereto via the pairs of aerofoils.

[0101] FIG. **8** is a plan view of a configuration of the aircraft **1** in which the first pair of aerofoils **3***a* is arranged in front of the second pair of aerofoils **3***b*, bearing in mind the flight direction. The first pair of aerofoils **3***a* has a positive sweep and the second pair of aerofoils **3***b* has a negative sweep, so that the plan view gives the impression of an o-shaped arrangement of the first pair of aerofoils **3***a* and of the second pair of aerofoils **3***b* when the ends of each of the aerofoils are interconnected by connecting structures **46**. Thus, all the aerofoils **3** are connected at their ends to connecting structures **46**, so that two connecting structures **46** are oriented parallel to the longitudinal direction **50** of the fuselage **13**. A first connecting structure **46** connects the right aerofoils of the first pair and of the second pair of aerofoils **3***a*, **3***b*, and a second connecting structure **46** connects the left aerofoils of

the first pair and of the second pair of aerofoils **3***a*, **3***b*. The aerofoils can also each have tail units **23** and/or high lift systems, such as landing flaps. The two connecting structures can each have two ends on which a respective lifting rotor **5** is arranged. The four lifting rotors **5** are positioned and oriented on the aircraft **1** such that the sum of the lifting forces generated thereby passes approximately through the center of gravity of the aircraft **1**, particularly when all the lifting rotors **5** are operated uniformly at the same time, so that a hover flight state **40** of the aircraft 1 is possible.

[0102] FIG. **9** is a plan view of a configuration of the aircraft **1** with six lifting rotors **5**. For this purpose, the aircraft has one pair of aerofoils 3 and two connecting structures **46**, the connecting structures **46** being oriented parallel to the transverse axis **60** of the aircraft. Based on the flight direction of the aircraft **1**, the connecting structures **46** are arranged offset relative to one another so that one connecting structure **46** is arranged in front of the aerofoils 3 and one connecting structure **46** is arranged behind the aerofoils 3. The connecting structures **46** can be provided, for example, with a profile which generates dynamic lift. so that the transverse arrangement of the connecting structures **46** provides the advantage of generating a lift by the connecting structures **46** in addition to the aerofoils **3**. The lifting rotors **5** are attached to the respective ends of the connecting structures **46** and aerofoils **3** oriented parallel to the transverse axis **60**. The six lifting rotors **5** are positioned and oriented such that the sum of the lifting forces generated thereby passes approximately through the center of gravity of the aircraft **1**, particularly when all the lifting rotors **5** are operated uniformly at the same time. As a result, the aircraft 1 can hover **40**. A thrust drive **9** can be provided on the tail for the propulsion of the aircraft **1** in the cruising state **41**. It can also be provided that the two connecting structures **46** are interconnected at their ends in each case by two further connecting elements **47**, in which case the two further connecting elements **47** are oriented parallel to the longitudinal axis **50** of the elongate fuselage **13** and vertically to the two connecting structures **46**.

[0103] FIG. **10** is a plan view of an aircraft **1** which has a support structure **27** with two mutually parallel elongate fuselages **13** and two pairs of aerofoils **3***a*, **3***b*, at the ends of which is attached a respective nacelle **6** with a respective lifting rotor **5**. The required lift can be generated by the lifting rotors **5** in a hover flight state **40**. The first pair of aerofoils **3***a* is arranged in front of the second pair of aerofoils **3***b*, bearing in mind the flight direction of the aircraft **1**. Furthermore, provided between the two fuselages **13** are two aerofoils **3***c*, **3***d* which are arranged offset relative to one another in the flight direction and which interconnect the two fuselages **13**. Like the two pairs of aerofoils **3***a*, **3***b*, the aerofoils **3***c*, **3***d* arranged between the fuselage **13** can have a profile which generates a dynamic lift. All the aerofoils of the aircraft **1** can be unswept in this case, i.e. they do not have a sweep. A thrust drive **9** for generating the propulsion of the aircraft **1** in the cruising state **41** can be attached to each of the two elongate fuselages **13** in the rear region of the fuselage **13**, i.e. on the tail, based on the flight direction. This means that one thrust drive **9** can be provided on the tail on each of the two fuselages **13**, so that the configuration shown here has two thrust drives **9**. High lift systems, for example landing flaps, can be provided on both pairs of aerofoils **3***a*, **3***b*.

[0104] FIG. **11** is a plan view of an aircraft **1** which has a support structure **27** with two mutually parallel elongate fuselages **13** and two pairs of aerofoils **3***a*, **3***b*. Furthermore, two aerofoils **3***c*, **3***d*, arranged offset relative to one another in the flight direction are provided between the two fuselages **13** and they interconnect the two fuselages **13**. Like the two pairs of aerofoils **3***a*, **3***b*, the aerofoils **3***c*, **3***d* arranged between the fuselage **13** can also have a profile which generates a dynamic lift. Each of the two elongate fuselages **13** has two lifting rotors **5** arranged offset to one another along the longitudinal axis **50** of a fuselage **13**. For example, a respective lifting rotor **5** is attached to each end of the elongate fuselage **13**. Thus, overall, four lifting rotors **5** can be provided on the aircraft **1** which generate lift in a hover flight state **40**. It is possible to provide on one of the two aerofoils **3***c*, **3***d* arranged between the fuselage **13** a thrust drive **9** which generates a thrust in the cruising state. The thrust drive **9** is preferably arranged in the rear region, based on the flight direction, i.e. between the two tails of the fuselages **13** of the aircraft **1** on aerofoil **3***d*. In this respect, the thrust drive **9** is arranged centrally between the two fuselages **13** to transfer the propulsion as uniformly as possible onto the aircraft **1**.

[0105] FIG. **12** is a perspective view of an aircraft **1** with a support structure **27** which has two pairs of aerofoils **3***a*, **3***b*, each of the two pairs of aerofoils **3***a*, **3***b* having a different sweep. The front pair of aerofoils **3***a*, based on the flight direction, has a negative sweep and the rear pair of aerofoils **3***b* has a positive sweep so that a plan view, as in FIG. **13**, gives the impression of an x-shaped arrangement of the aerofoils **3***a*, **3***b*. However, it is pointed out that the two pairs of aerofoils **3***a*, **3***b* do not necessarily have to have the same wingspan or aspect ratio. For example, the rear pair of aerofoils **3***b* has a greater wingspan than the front pair of aerofoils **3***a* to thus achieve a higher aerodynamic efficiency. Likewise, the wing area of the rear pair of aerofoils **3***b* can be greater than that of the front pair of aerofoils **3***a* and vice versa. A nacelle **6** with a respective lifting rotor **5** can be attached to the ends of each aerofoil **3***a*, **3***b* so that when all the lifting rotors **5** are operated uniformly at the same time, the lifting forces generated thereby pass approximately through the center of gravity of the aircraft **1**. However, the nacelles **6** with the lifting rotors **5** do not necessarily have to be arranged at the ends of the pairs of aerofoils **3***a*, **3***b*. They can be provided in any position on or under the pairs of aerofoils **3***a*, **3***b*, for example also in the vicinity of the fuselage. Furthermore, the support structure **27** has an elongate fuselage **13** to which the two pairs of aerofoils **3***a*, **3***b* are attached so that the lift required for a hover flight state **40** can be generated. A thrust drive **9** is attached in the tail region of the aircraft **1** to generate propulsion in a cruising state **41**. The aerofoils **3***a*, **3***b* can be attached in the upper region of the fuselage **13**, based on a vertical axis or yaw axis of the aircraft **1**, so that during ground operation of the aircraft **1**, a relatively great distance is provided between the ground and the aerofoils **3***a*, **3***b*. As a result, the lifting rotors **5** can also be arranged under the aerofoils **3***a*, **3***b*. The aerofoils **3***a*, **3***b* can also be oriented anhedrally. A person skilled in aircraft construction understands the term "anhedrally" as meaning a negative V position of aerofoils **3***a*, **3***b* when viewed in the longitudinal direction **50** of the fuselage **13** or in the flight direction. This means that the aerofoils **3***a*, **3***b* are lowered from the fuselage **13** to their ends based on the vertical axis of the aircraft **1**. The maneuverability in particular of the aircraft **1** can be increased by a negative V position. Both a negative V position and a positive V position of the aerofoils can be provided in all the embodiments described above and below. In the positive V position, the aerofoils **3** ascend from the fuselage **13** to their ends based on the vertical axis of the

aircraft **1** so that a view in the longitudinal direction **50** gives the impression of a V shape of the aerofoils **3**. It is possible for the front pair of aerofoils **3***a* to have a different wingspan compared to the rear pair of aerofoils **3***b*. Consequently, a greater aerodynamic effectiveness can be achieved with a suitable arrangement of the aerofoils. For example, the front pair of aerofoils **3***a* has a smaller wingspan than the rear pair of aerofoils **3***b*. Furthermore, the front pair of aerofoils **3***a* can be provided on the fuselage **13** at a different height along the vertical axis of the aircraft **1**. For example, the front pair of aerofoils **3***a* is arranged higher on the fuselage **13** with respect to the vertical axis than the rear pair of aerofoils **3***b*, as a result of which with a possible separation of the flow on the front pair of aerofoils **3***b*, the rear pair of aerofoils **3***b* continues to generate lift so that the aircraft **1** is able to perform an aerodynamically or mechanically stable flight.

[0106] In all the embodiments with a tandem wing structure, i.e. with two pairs of aerofoils, the first pair of aerofoils **3***a* and the second pair of aerofoils can have a different wing area. A person skilled in aircraft construction understands "wing area" as meaning the area which is described by the wing outline, for example in a plan view.

[0107] FIG. **14** is a plan view of an aircraft **1** in which the fuselage **13** simultaneously forms the aerofoils **3**. This means that the fuselage **1** is integrated into the aerofoils **3**. This type of configuration is also known as a flying wing configuration. In a plan view of the aircraft **1**, the fuselage **13** or the aerofoils **3** have a delta shape or triangular shape. In other words, the trailing edge sweep of the aerofoils **3** is significantly smaller than the leading edge sweep. It is possible to provide on the fuselage **13** or on the aerofoils **3** four lifting rotors **5** which are arranged such that the aircraft **1** can be brought into a hover flight state **40**. In this respect, one lifting rotor **5** is attached to a front point and one lifting rotor **5** is attached to a rear edge of the fuselage **13**. Two further lifting rotors **5** are respectively attached to the two ends of the aerofoils in a wingspan direction of the aerofoils **3** or in a transverse direction **60** to the flight direction. To keep the aircraft **1** balanced during the hover flight state **40**, the lifting rotors **5** can be operated at different intensities. In other words, the thrust of each lifting rotor **5** can be adjusted individually so that in addition to allowing a balanced state during hover flight, a tilting of the aircraft **1**, for example about the longitudinal direction **50** or about a transverse axis **60** of the aircraft **1**, is also possible. Furthermore, a respective thrust drive **9** can be provided on each of the aerofoils **3**, said thrust drives **9** being attached to the respective leading edges of the aerofoils **3**. However, the thrust drives **9** can also be attached to the respective trailing edges of the aerofoils **3**. In any case, the thrust drives **9** are arranged such that propulsion is generated in the longitudinal direction **50** of the aircraft 1.

[0108] FIG. **15** is a plan view of an aircraft **1** with a support structure **27**, the support structure **27** having an elongate fuselage **13**, a pair of aerofoils **3** and connecting elements **47**. The connecting elements **47** are fitted, for example as bar-shaped elements or beam-shaped elements, to the ends of the aerofoils **3** of the pair of aerofoils **3** and are oriented parallel to the longitudinal direction **50** or parallel to the elongate fuselage **13** of the aircraft 1. Two lifting rotors **5** are respectively attached, offset relative to one another in the longitudinal direction **50**, to the connecting elements **47**, i.e. to the bar-shaped elements. Four lifting rotors **5** thereby generate the corresponding lift for a hover flight state **40**. A thrust drive **9** for the propulsion of the aircraft **1** while cruising **41** is attached to the fuselage **13**.

[0109] As shown in FIG. **16**, instead of being attached to the ends of the aerofoils **3**, the connecting elements **47** can also be attached to approximately the center of each of the aerofoils **3**. In other words, a first connecting element **47** is attached, for example, parallel to the longitudinal direction **50** or parallel to the elongate fuselage **13** approximately centrally between the fuselage **13** and the end of the first aerofoil of the pair of aerofoils **3** such that a first end of the first connecting element **47** projects beyond the leading edge of the first aerofoil **3** and a second end of the first connecting element **47** projects beyond the trailing edge of the first aerofoil **3**. Correspondingly, a second connecting element **47** is attached parallel to the longitudinal direction **50** or parallel to the elongate fuselage **13** approximately centrally between the fuselage **13** and the end of the second aerofoil **3** of the pair of aerofoils **3** such that a first end of the second connecting element **47** projects beyond the leading edge of the second aerofoil **3** and a second end of the second connecting element **47** projects beyond the trailing edge of the second aerofoil **3**. Two lifting rotors **5** are respectively attached, being offset relative to one another in the longitudinal direction **50**, to the connecting elements **47**, i.e. to the bar-shaped or beam-shaped elements. These lifting rotors **5** are attached, for example, to the respective ends, projecting beyond the aerofoils **3**, of the two connecting elements **47** so that the lifting rotors **5** are not located above the aerofoils **3**, but they project beyond them along the longitudinal direction **50** of the fuselage **13**. The region above the aerofoils **3** describes the region over the aerofoils **3** in respect of the vertical axis usually used in aircraft construction.

[0110] FIG. **17** is a perspective view of an aircraft **1** with a support structure **27**, comprising a fuselage **13**, two pairs of aerofoils **3***a*, **3***b* arranged in tandem in the longitudinal direction **50**, and two elongate or bar-shaped connecting elements **47** arranged parallel to the longitudinal direction **50**. The pair of aerofoils **3***a* attached in the front region of the elongate fuselage 13 with respect to the flight direction or the longitudinal direction **50** has a positive sweep, whereas the pair of aerofoils **3***b* attached in the rear region of the elongate fuselage **13** does not have a sweep or has a smaller sweep compared to the sweep of the pair of aerofoils **3***a* attached in the front region of the elongate fuselage **13**. For example, the sweep of the first pair of aerofoils **3***a* is between 20 and 30 degrees. The pairs of aerofoils **3***a*, **3***b* can be attached to the fuselage **13** at different heights with respect to the vertical axis of the aircraft **1**. In other words, this means that to an observer who is looking in the longitudinal direction **50** or in the flight direction of the aircraft **1**, the first pair of aerofoils **3***a* is arranged under the second pair of aerofoils **3***b*. The aerofoils of the two pairs of aerofoils **3***a*, **3***b* are thus arranged offset along the vertical axis of the aircraft **1**. Four connecting elements **47** are attached to the respective ends of the aerofoils **3***a*, **3***b*, which connecting elements extend parallel to the longitudinal direction **50** of the fuselage **13**. Since the aerofoils **3***a*, **3***b* are attached to the fuselage **13** at different heights along the vertical axis on a first side of the fuselage, for example on the left fuselage side, the connecting elements **47** which are attached to the ends of the aerofoils **3***a*, **3***b* on the left fuselage side are also located at different heights. In this respect, a connecting piece **48** can be provided which interconnects the connecting elements **47** on one side of the fuselage. The connecting piece **48** can be a plate-shaped or disc-

shaped component which comprises a tail unit **23** in particular, such as the rudder unit of the aircraft **1**. The height difference between the two pairs of aerofoils **3***a*, **3***b*, which results in respect of the vertical axis, can be bridged by the provision of the connecting piece **48** to accommodate the rudder unit. Lifting rotors **5** are again respectively provided on the connecting elements **47**. One lifting rotor **5** is attached to each of the four connecting elements **47**. Two lifting rotors **5**, offset relative to one another in the longitudinal direction **50**, are thus positioned and oriented on both sides of the elongate fuselage **13** such that a sum of the lifting forces generated by the lifting rotors passes approximately through a center of gravity of the aircraft **1**, particularly when all the lifting rotors **5** are operated uniformly at the same time. Furthermore, a thrust drive **9** to generate the propulsion of the aircraft **1** is provided in the tail region of the elongate fuselage **13**.

[0111] FIG. **18** is a perspective view of an elongate nacelle **6** with a single-blade propeller **7***a*. This view also shows a rotational direction **70** of the single-blade propeller **7***a*. The single-blade propeller **7***a* has on an end projecting beyond its rotor shaft **19** a weight **7***b* which acts as a counter-weight to the single-blade propeller. Thus, the single-blade propeller **7***a* has a first portion between the weight **7***b* and the rotor shaft **19** and a second portion between the end of the blade of the single-blade propeller **7***a* and the rotor shaft **19**. Both portions of the single-blade propeller **7***a* are therefore on different sides of the rotor shaft **19**. The length of the first portion of the single-blade propeller **7***a* measures, for example, between a quarter and a third of the overall length of the single-blade propeller **7***a*, whereas the length of the second portion of the single-blade propeller **7***a* measures between two-thirds and three-quarters of the overall length of the single-blade propeller **7***a*. The single-blade propeller **7***a* can be, for example, part of a lifting rotor **5** of the aircraft **1** which contributes towards the lift of the aircraft **1** for a hover flight state **40**. The single-blade propeller **7***a* can be brought into a parallel orientation to the elongate nacelle **6** for a cruising state **41**, so that when stationary, the single-blade propeller **7***a* is oriented substantially parallel to the flight direction or to the longitudinal direction **50** of the aircraft **1**. The single-blade propeller **7***a* and the nacelle **6** are then oriented in alignment with one another, which reduces the air resistance while the aircraft **1** is cruising. In turn, the nacelle **6** can be attached to one end of an aerofoil **3**. In a cruising state, the lift can be generated by an aerofoil **3** provided with a profile which generates a dynamic lift. Propulsion is ensured by a thrust drive not shown in FIG. **18**. The single-blade propeller **7***a* shown in FIG. **18** can be used in all the previously described embodiments, for example as part of a lifting rotor **5**.

[0112] Two propellers can also be arranged one above the other. This applies to single-blade propellers and to double-blade propellers or multi-blade propellers. During hover flight, the lower propeller can rotate, for example, in the same and/or in the opposite rotational direction as the upper propeller. The angular momentum can be reduced by an opposite rotational direction. Two superimposed propellers each with its own motor can also be provided, thereby making it possible to increase redundancy and thus safety. If one motor fails, the aircraft **1** could continue to hover. In a further embodiment, it can be provided that the propellers can be stowed behind an aerodynamic casing, for example by moving into the nacelle **6**, so that the resistance can be further reduced. For this purpose, for example, flaps can be provided on the nacelles **6** which can be closed after the propeller has moved into the nacelles **6**.

[0113] In a further embodiment, the propeller can be mounted in an articulated manner. This can be advantageous particularly during forwards flight of the aircraft **1**, since rolling moments due to an asymmetrical flow on the propellers are not transferred thereby onto the aircraft **1**. Furthermore, bending moments arising in the propeller blade would stress the motor hub to a lesser extent, because the bending moments would remain in the blade. This applies both to a double-blade propeller and to a single-blade propeller.

[0114] Embodiments of the proposed aircraft **1** can be configured with a very lightweight structure, particularly compared to conventional aircraft capable of vertical take-off, and at the same time they can allow high cruising speeds. The multicopter-like configuration with a plurality of lifting rotors can allow a simple and efficient hover flight mode. Furthermore, it is easily possible to change from a vertical to a horizontal flight mode. The controls and control algorithms proposed for this purpose can be configured relatively simply. The proposed aircraft concept can be implemented with simple, economical and robust drive motors and power transmission mechanisms. For example, the lifting rotors can be operated by simple electric motors, only the speed of which has to be controlled, The thrust drive can be driven by any type of simple motor and, compared to conventional aircraft, can have a substantially lower power, since in particular the horizontal maximum thrusts required for the take-off of an aircraft do not have to be delivered. Overall, the proposed aircraft can have a high payload capacity.

1-24. (canceled)

25. An aircraft, comprising:

a support structure;

a wing structure;

at least three lifting rotors; and

at least one thrust drive;

wherein the wing structure is attached to the support structure or is part of the support structure,

wherein the wing structure is configured to generate a lifting force for the aircraft during horizontal motion of the aircraft using at least one aerofoil which is provided with a profile generating a dynamic lift,

wherein each of the at least three lifting rotors is attached to the support structure, has a propeller and is configured to rotate the propeller to generate a lifting force, acting in the vertical direction, for the aircraft,

wherein the propeller of each of the at least three lifting rotors has exactly two propeller blades, and

wherein the at least one thrust drive is configured to generate a thrust force, acting in the horizontal direction, on the support structure.

26. The aircraft according to claim **25**, wherein the support structure, together with the wing structure, is configured as a tandem wing structure with an elongate fuselage and two pairs, arranged horizontally in tandem, of aerofoils which project transversely from the fuselage.

27. The aircraft according to claim **26**, wherein one of the at least three lifting rotors is respectively arranged on each of the at least one aerofoil.

28. The aircraft according to claim **26**, further comprising a nacelle, arranged on each of the at least one aerofoil, on which one of the at least three lifting rotors is respectively arranged.

29. The aircraft according to claim **26**, wherein a tail unit is arranged on each of the aerofoils.

30. The aircraft according to claim **25**, wherein the at least three lifting rotors are configured such that a plane of rotation in which the propeller blades of a respective lifting rotor rotate is stationary relative to a motor-driven rotor shaft of the respective lifting rotor.

31. The aircraft according to claim **30**, wherein the propeller blades of the respective lifting rotor are rigidly connected to the motor-driven rotor shaft.

32. Aircraft according to claim **30**, wherein the propeller blades of the respective lifting rotor are swivelably connected to the motor-driven rotor shaft such that a pitch of the propeller blades can be varied.

33. The aircraft according claim **25**, having at least four lifting rotors.

34. The aircraft according to claim **25**, wherein the sum of the lifting forces which can be generated by the at least three lifting rotors passes substantially through a center of gravity of the aircraft; and

wherein a neutral point of the wing structure relative to the center of gravity of the aircraft can be suitably positioned for a horizontal flight.

35. The aircraft according to claim **25**, wherein the at least three lifting rotors are each configured to stop respective propeller blades of a respective lifting rotor in a position relative to the support structure.

36. The Aircraft according to claim **25**, wherein the at least three lifting rotors and the thrust drive are driven by motors which are controllable independently of one another.

37. The aircraft according to claim **25**, wherein each of the at least three lifting rotors is driven by an electric motor.

38. The aircraft according to claim **37**, wherein the thrust drive is driven by an internal combustion engine and the internal combustion engine is coupled to a generator to provide electrical energy to the electric motors of the at least three lifting rotors.

39. The aircraft according to claim **25**, wherein the at least one aerofoil is attached to the support structure such that it is swivelable about a rotational axis.

40. The aircraft according to claim **39**, wherein a second aerofoil is attached to the support structure such that it is swivelable about the rotational axis, and wherein the at least one aerofoil and the second aerofoil are in a swivelled-out state for hover flight.

41. The aircraft according to claim **40**, wherein the at least one aerofoil and the second aerofoil are in a swivelled-in state for cruising in which leading edges of the aerofoils are oriented in alignment with one another.

42. The aircraft according to claim **25**, wherein the support structure together with the wing structure is configured as a tandem wing structure with an elongate fuselage and two pairs of aerofoils which are arranged horizontally in tandem and project from the fuselage.

43. The aircraft according to claim **42**, wherein the first pair of aerofoils has a first sweep which differs from a second sweep of the second pair of aerofoils.

44. The aircraft according to claim **42**, wherein the first pair of aerofoils and the second pair of aerofoils are connected by at least one connecting structure.

45. The aircraft according to claim **44**, wherein the at least one connecting structure has an elongate form and is oriented parallel to the elongate fuselage, and wherein the at least one connecting structure has a tail unit.

46. The aircraft according to claim **42**, wherein the first pair of aerofoils and the second pair of aerofoils are arranged offset relative to one another in a vertical direction.

47. The aircraft according to claim **25**, wherein the propellers of the lifting rotors are configured as single-blade propellers.

* * * * *

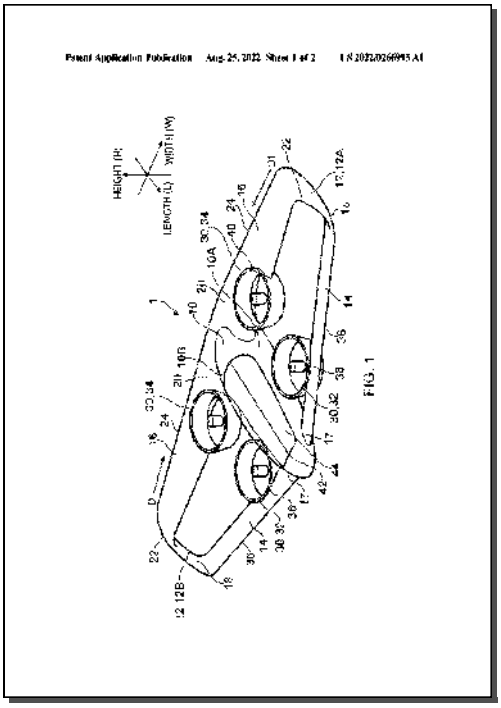

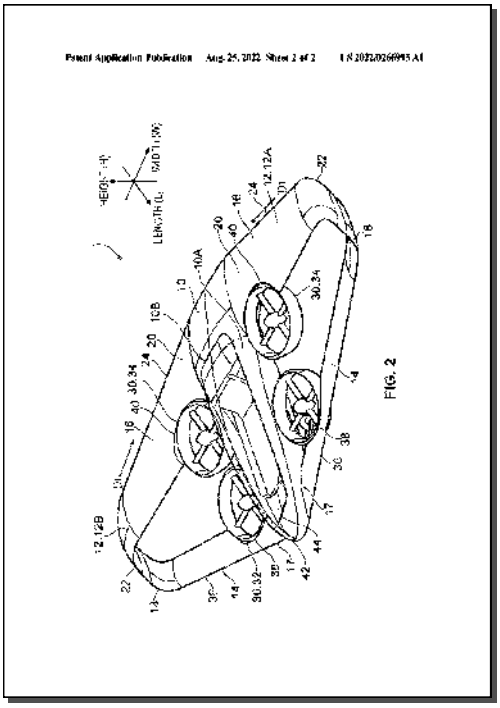

Drawing pages of US2022266995 A1

US 20170174323A1

(19) United States

(12) Patent Application Publication

(10) Pub. No.: US 2017/0174323 A1

(43) Pub. Date: Jun. 22, 2017

Roberts et al.

(54) REDUNDANT AIRCRAFT PROPULSION SYSTEM USING CO-ROTATING PROPELLERS JOINED BY TIP CONNECTORS

(71) Applicant: **Amazon Technologies, Inc.**, Seattle, WA (US)

(72) Inventors: **Nicholas Hampel Roberts**, Seattle, WA (US); **Dominic Timothy Shiosaki**, Seattle, WA (US); **Ricky Dean Welsh**, Bellevue, WA (US)

(21) Appl. No.: **14/973,610**

(22) Filed: **Dec. 17, 2015**

Publication Classification

(51) **Int. Cl.**

B64C 11/48	(2006.01)
B64C 39/02	(2006.01)
B64C 11/30	(2006.01)
B64C 27/46	(2006.01)
B64C 27/14	(2006.01)

(52) **U.S. Cl.**

CPC ***B64C 11/48*** (2013.01); ***B64C 27/463*** (2013.01); ***B64C 27/14*** (2013.01); ***B64C 11/306*** (2013.01); ***B64C 39/024*** (2013.01); *B64C 2201/024* (2013.01); *B64C 2201/108* (2013.01)

(57) **ABSTRACT**

Multiple propeller blades may be joined by tip connectors to form a closed propeller apparatus. The tip connectors may create continuous structure between adjacent tips of a first propeller and a second propeller. Use of the tip connectors may reduce vortices created near the tips of the propeller blades, which cause drag and slow the rotation of the propeller blades. The tip connectors may also reduce noise caused by rotation of propeller blades. Further, the tip connectors reduce or eliminate deflection of the propeller blades by creating a support structure to counteract forces that would otherwise cause deflection of the propeller blades, thereby improving propeller blade loading. In some embodiments, the tip connectors may be formed of a malleable material and/or include one or more joints that enable at least one of the propellers to modify a pitch of blades of the propeller.

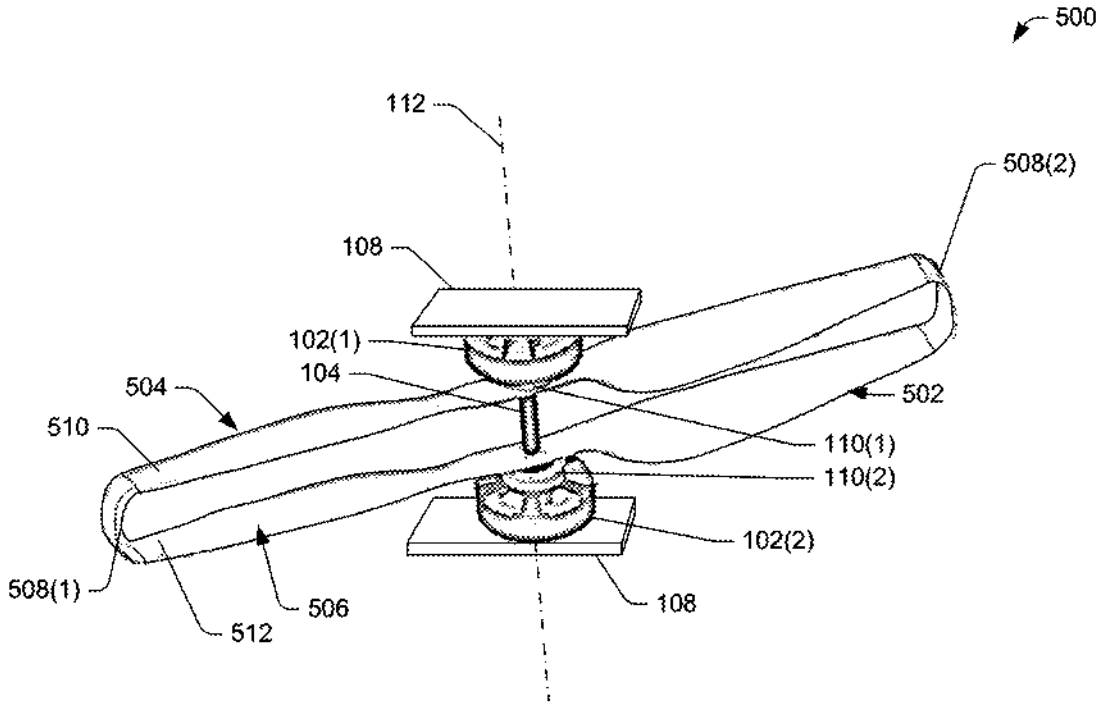

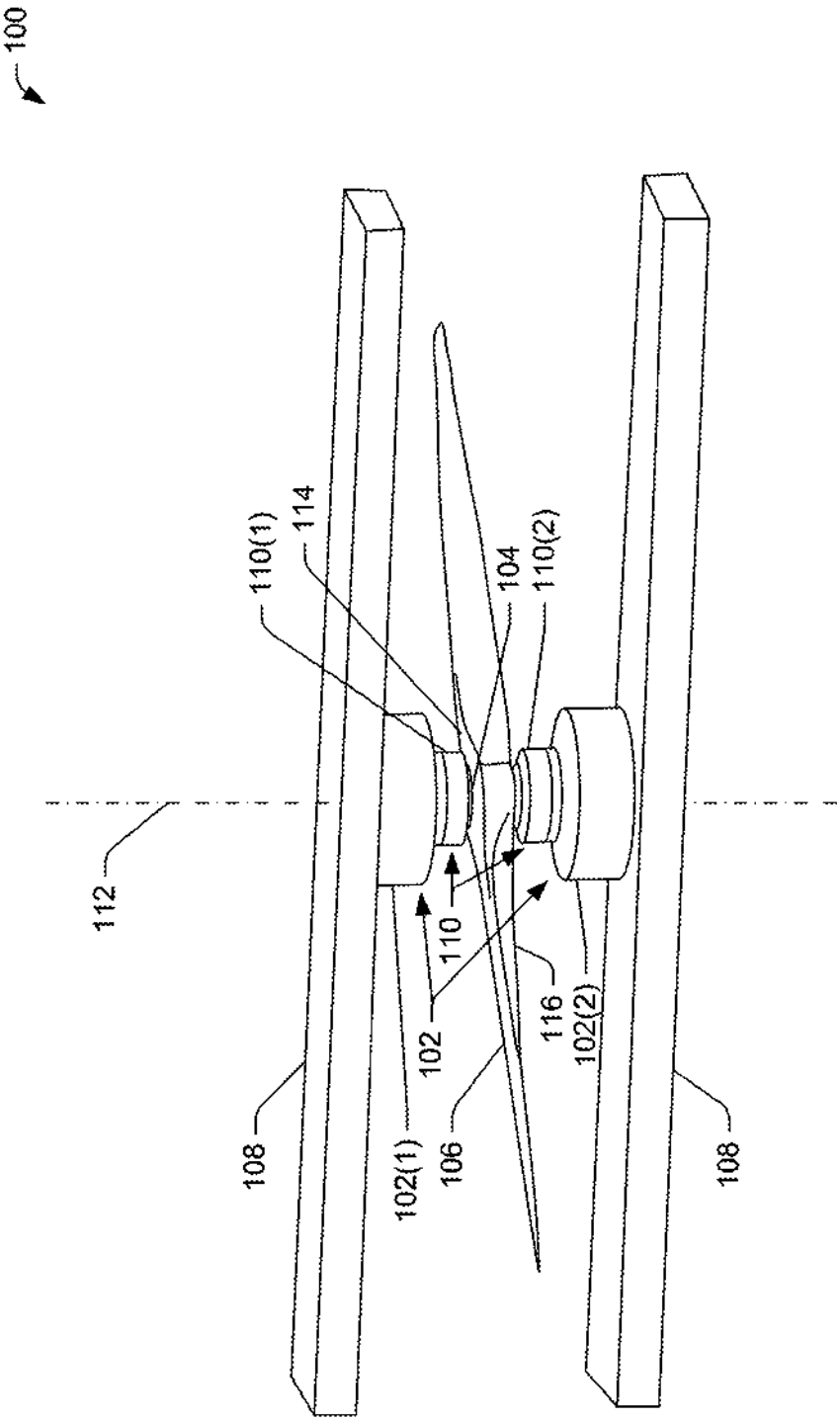

FIG. 1A

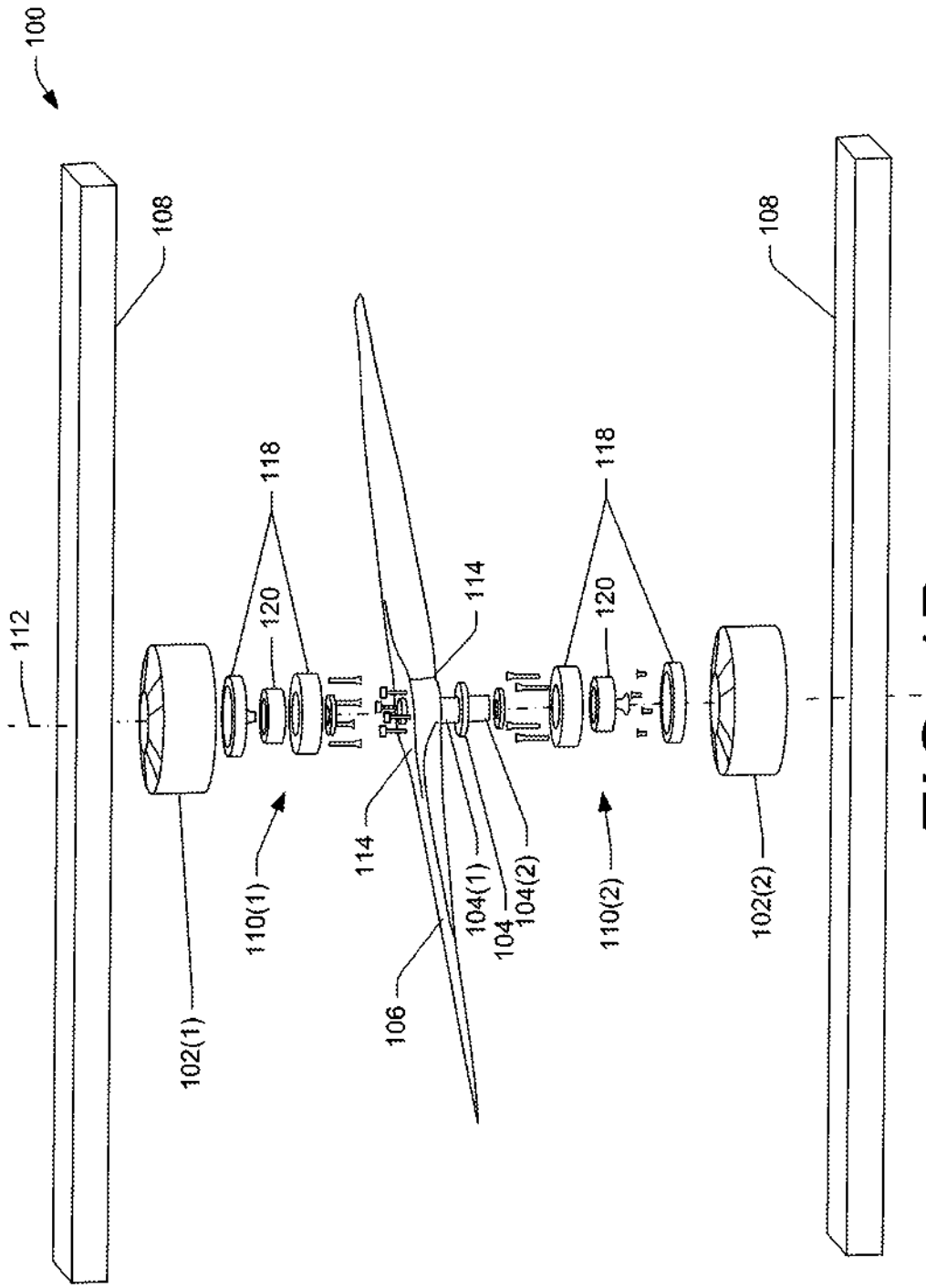
100
108
108
112
118
118
120
120
114
114
110(1)
110(2)
102(1)
102(2)
104(1)
104
104(2)
106

FIG. 1B

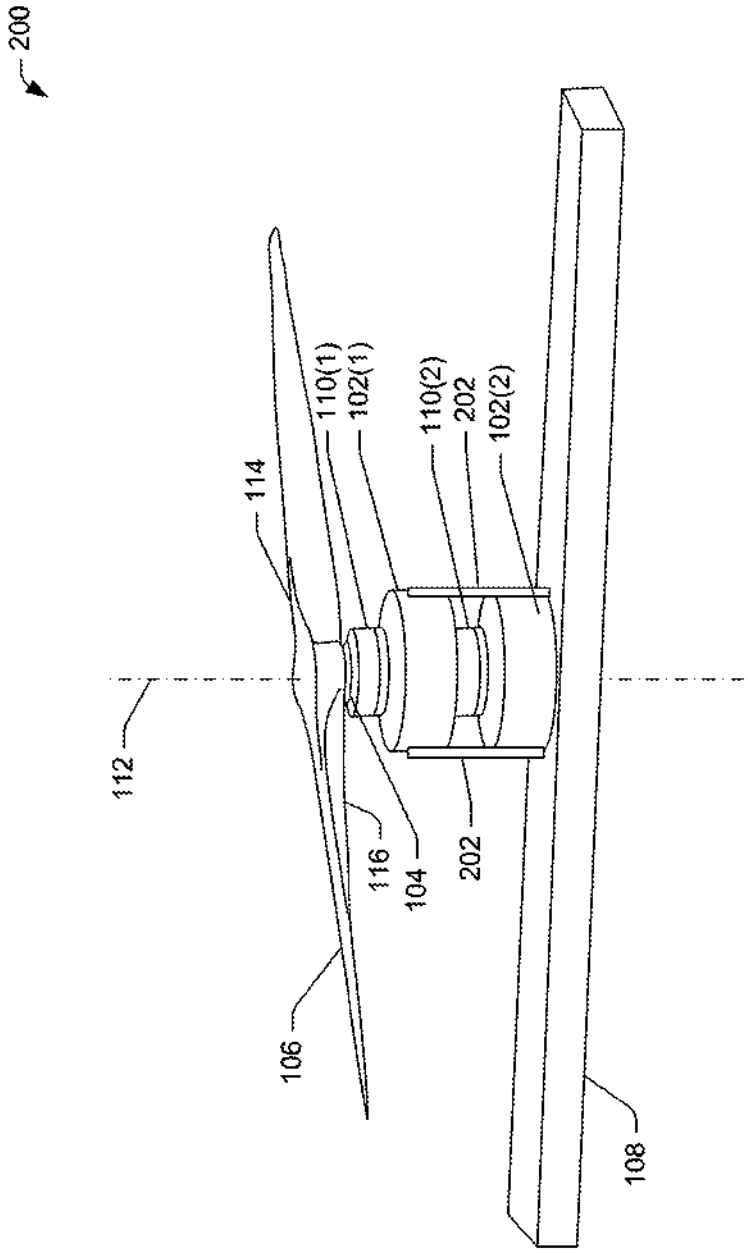

FIG. 2

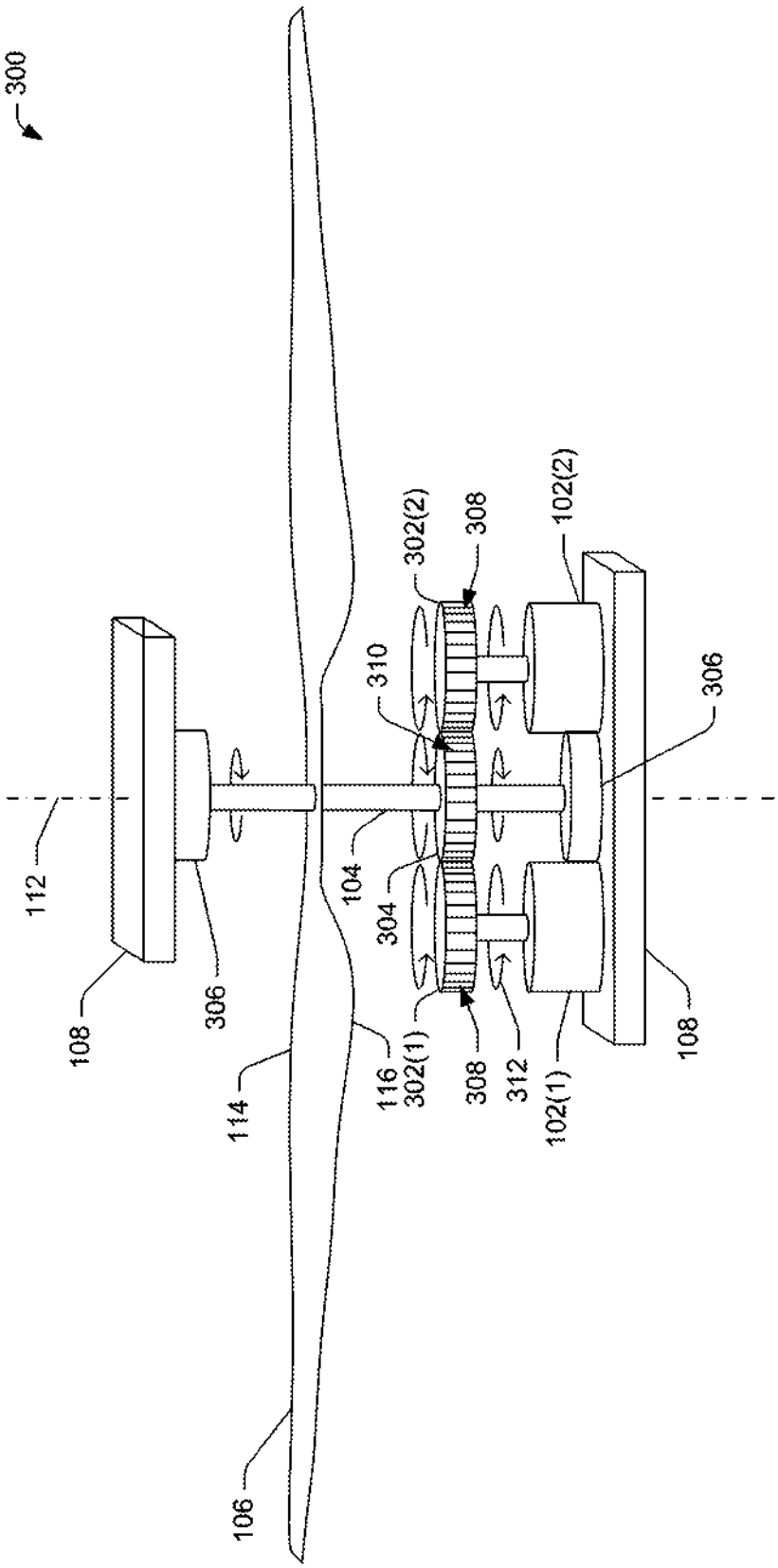
300
112
108
306
114
116
106
104
304
310
302(2)
308
102(2)
306
302(1)
308
312
102(1)
108

FIG. 3

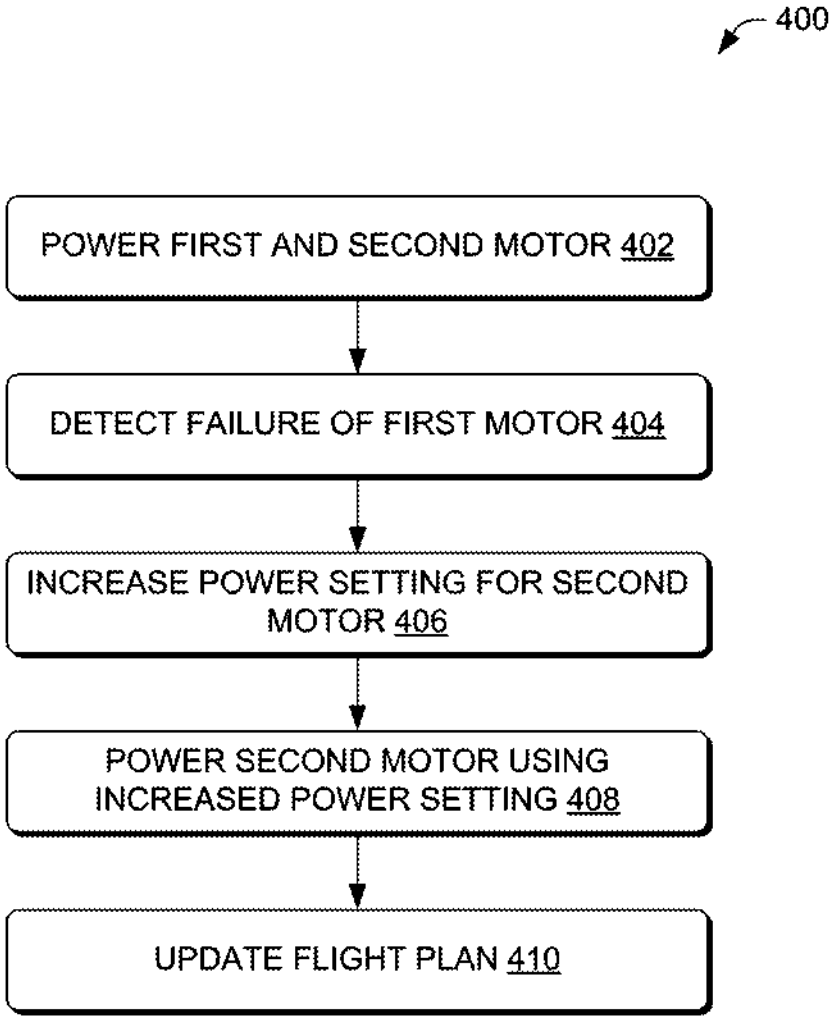
400
POWER FIRST AND SECOND MOTOR 402
DETECT FAILURE OF FIRST MOTOR 404
INCREASE POWER SETTING FOR SECOND MOTOR 406
POWER SECOND MOTOR USING INCREASED POWER SETTING 408
UPDATE FLIGHT PLAN 410

FIG. 4

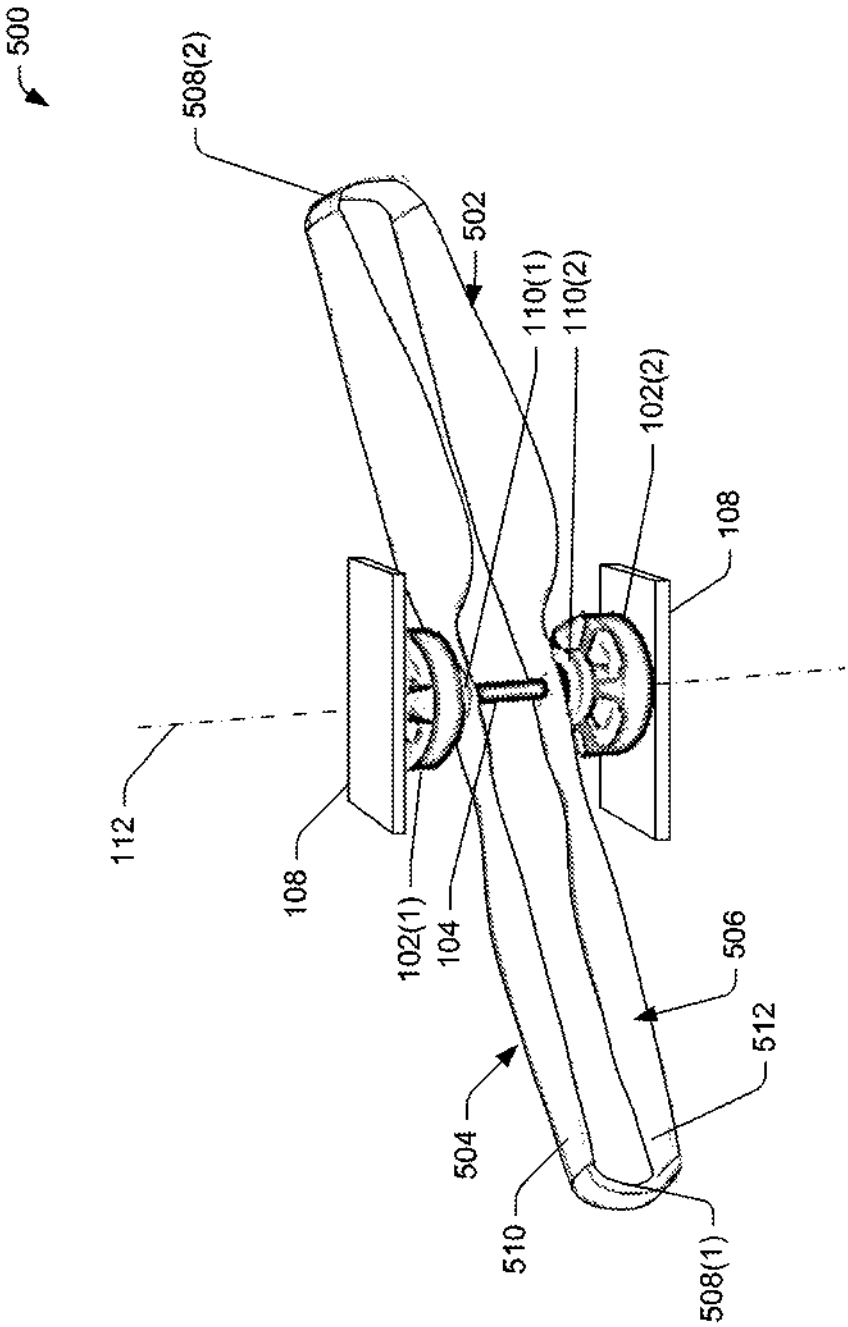
500
508(2)
502
110(1)
110(2)
102(2)
108
112
108
102(1)
104
506
512
504
510
508(1)

FIG. 5A

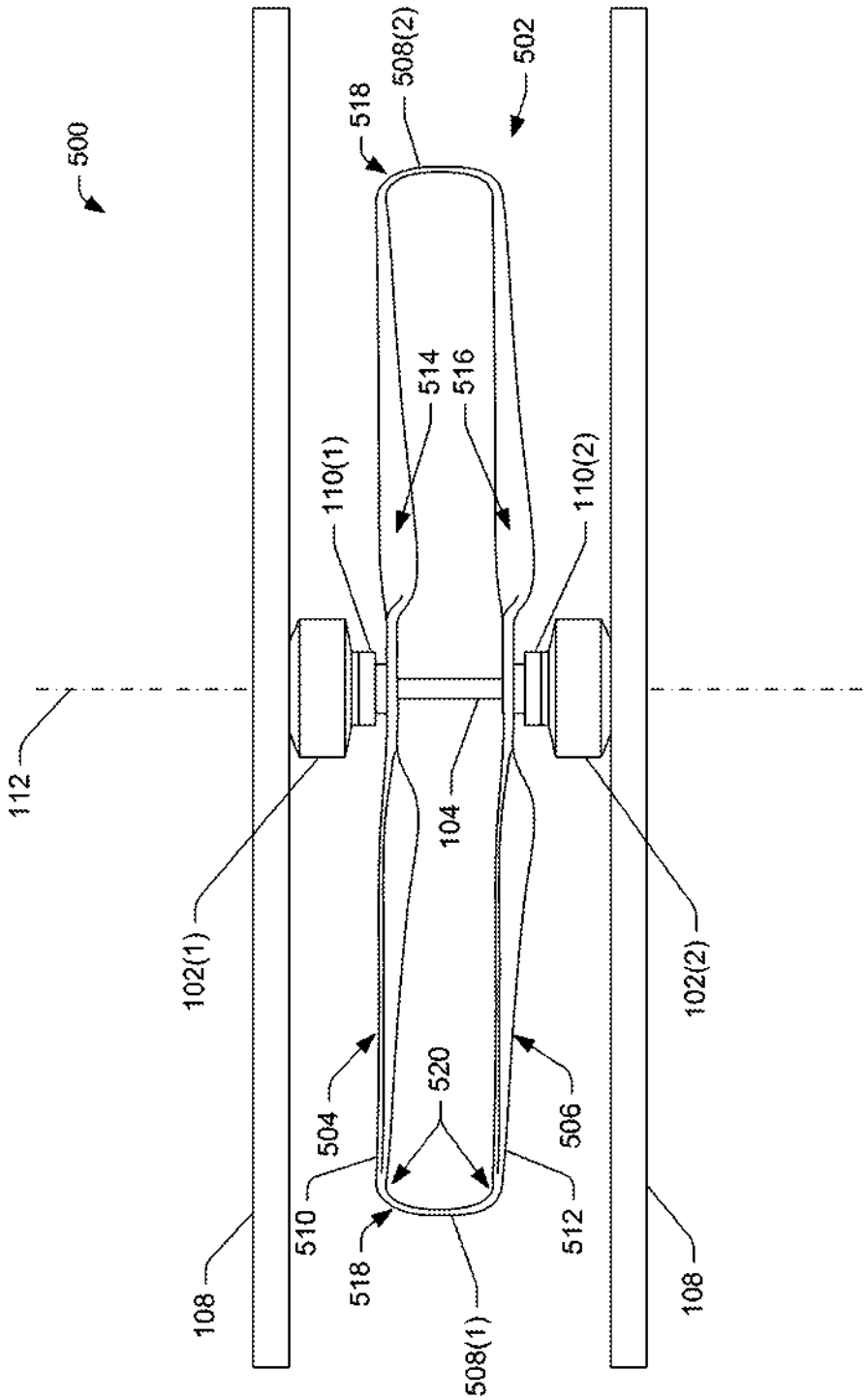
500
518
508(2)
502
514
516
110(1)
110(2)
112
102(1)
104
102(2)
504
520
506
510
518
512
108
508(1)
108

FIG. 5B

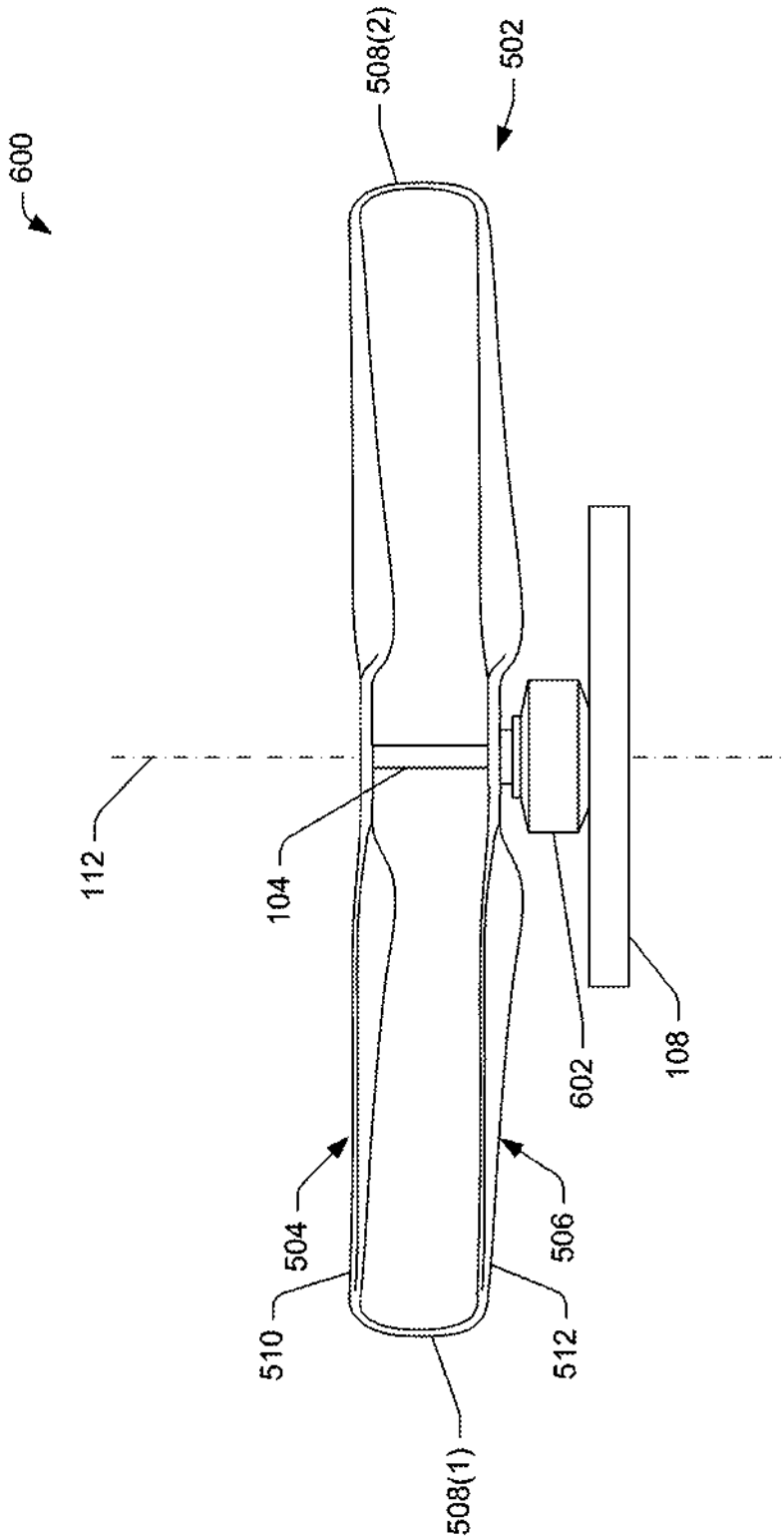

FIG. 6

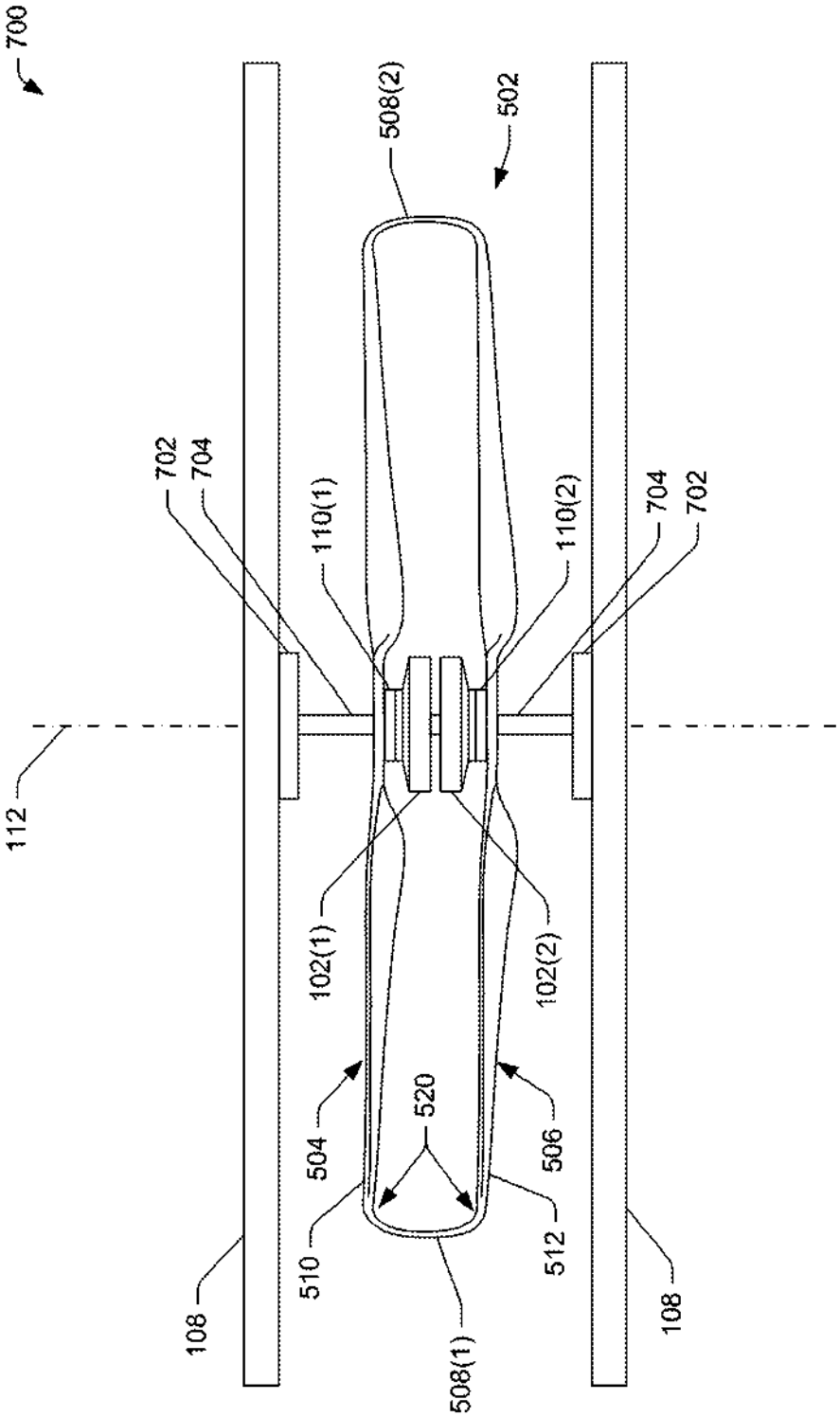
700
508(2)
502
702
704
110(1)
110(2)
704
702
112
102(1)
102(2)
504
520
506
510
512
108
508(1)
108

FIG. 7

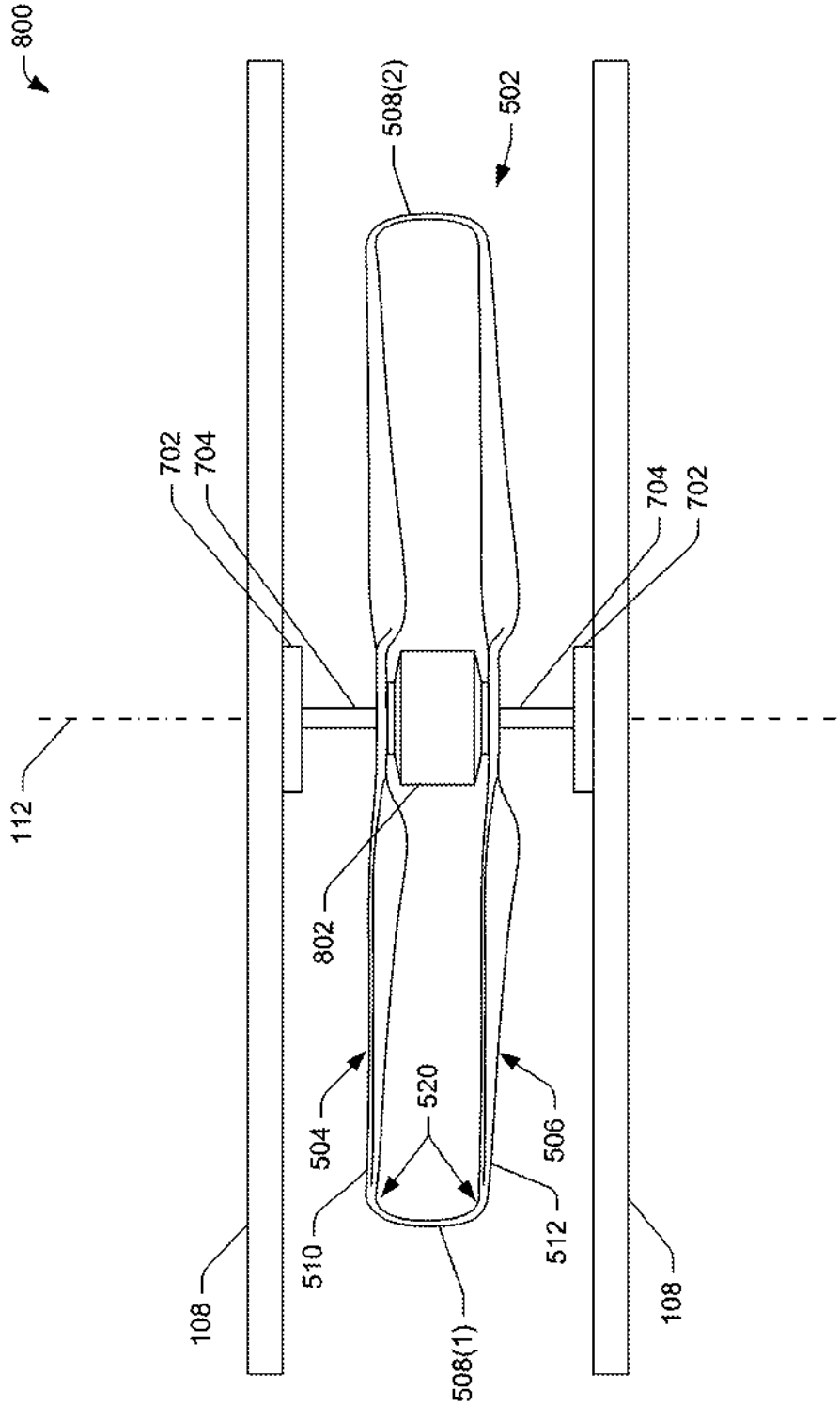
800
508(2)
502
702
704
704
702
112
802
504
520
506
510
512
108
508(1)
108

FIG. 8

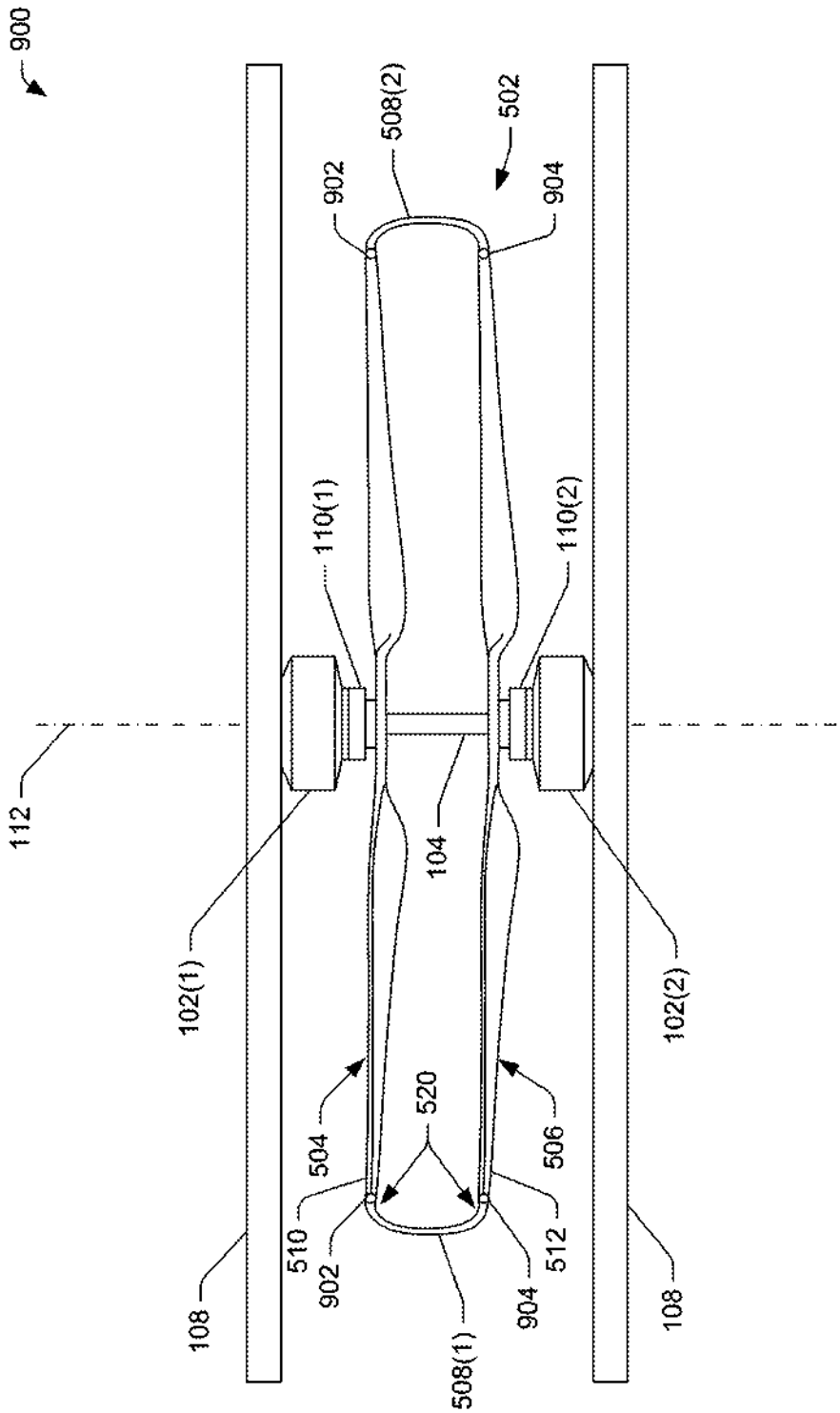
900
508(2)
502
902
904
110(1)
110(2)
112
104
102(1)
102(2)
504
520
506
510
512
902
904
108
108
508(1)

FIG. 9

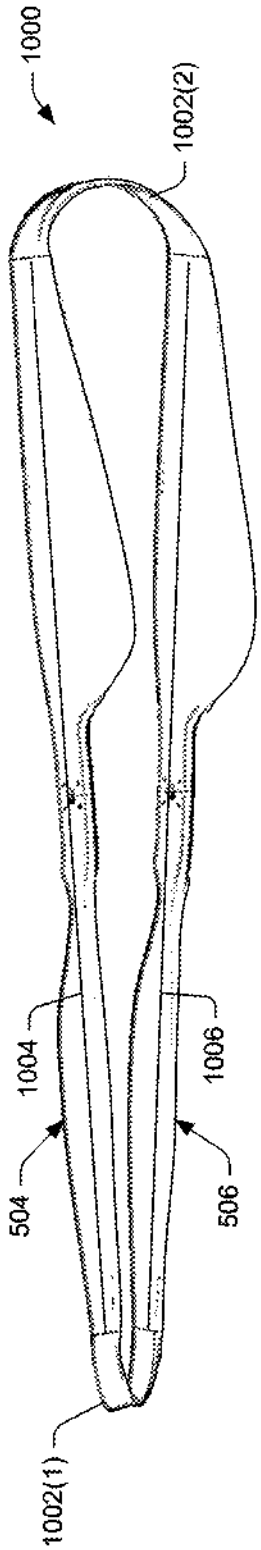

FIG. 10A

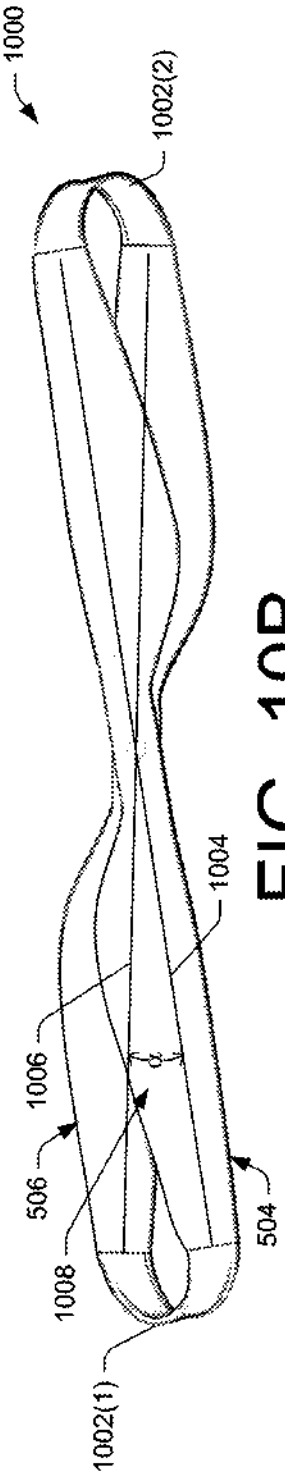

FIG. 10B

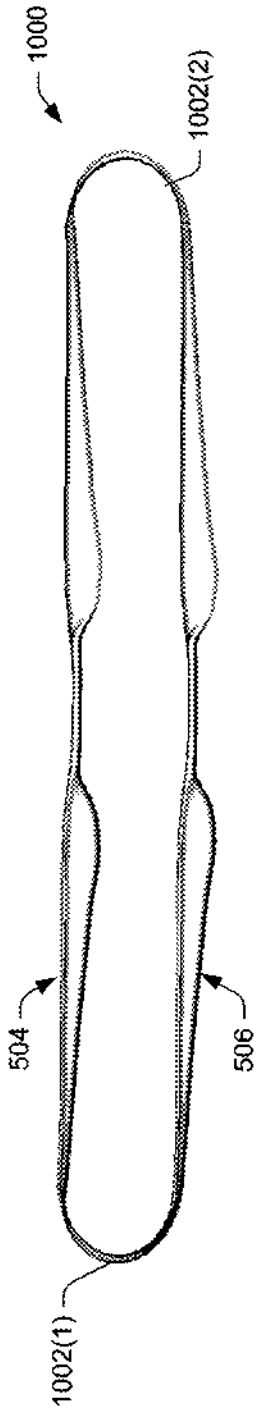

FIG. 10C

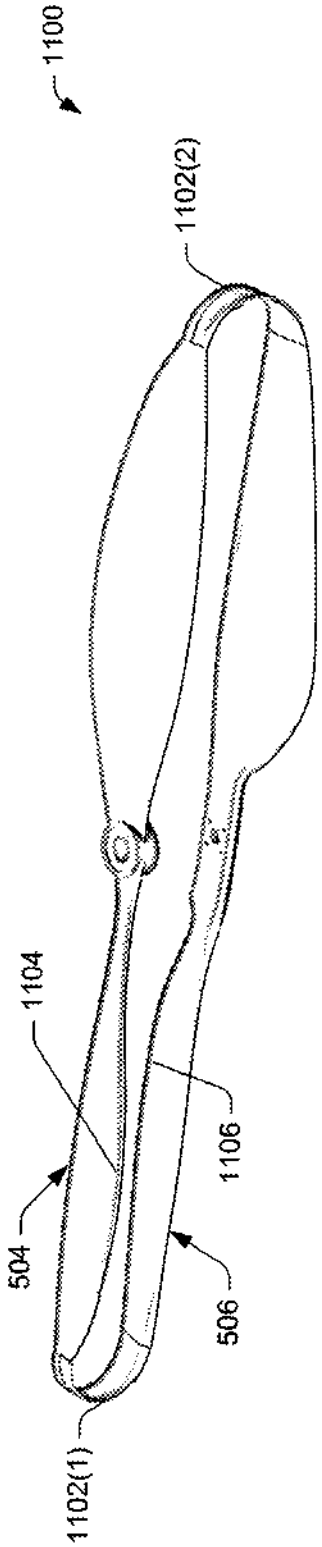

FIG. 11A

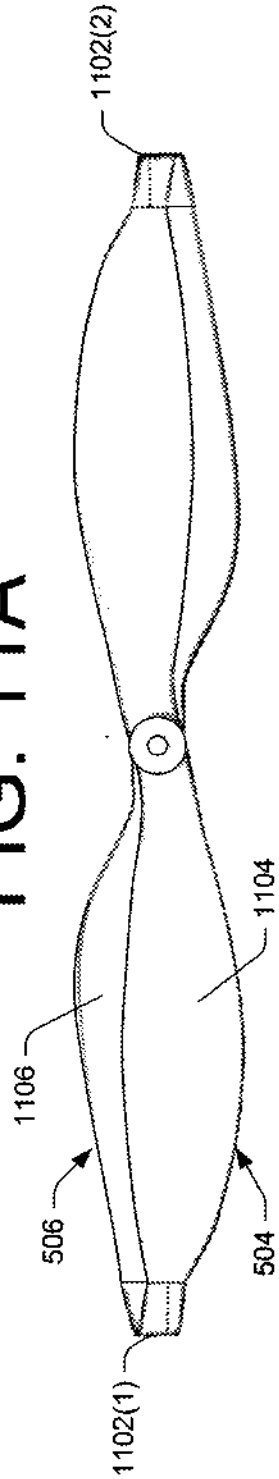

FIG. 11B

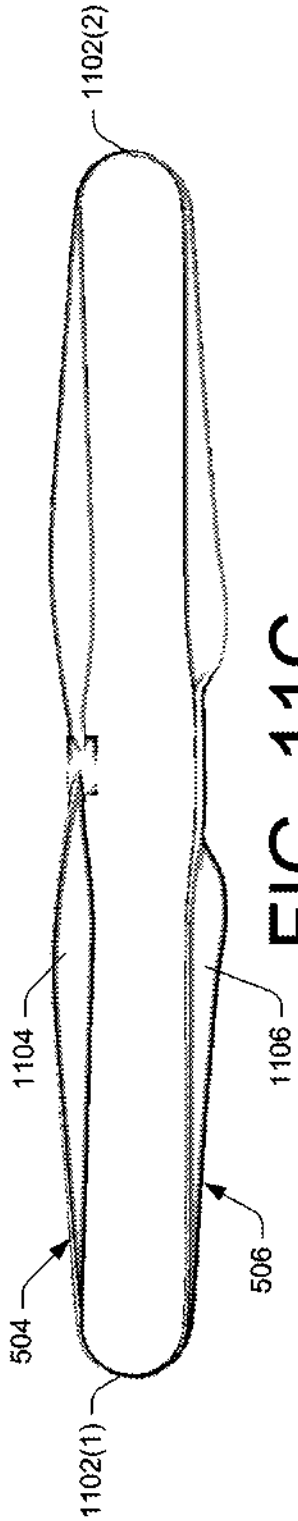

FIG. 11C

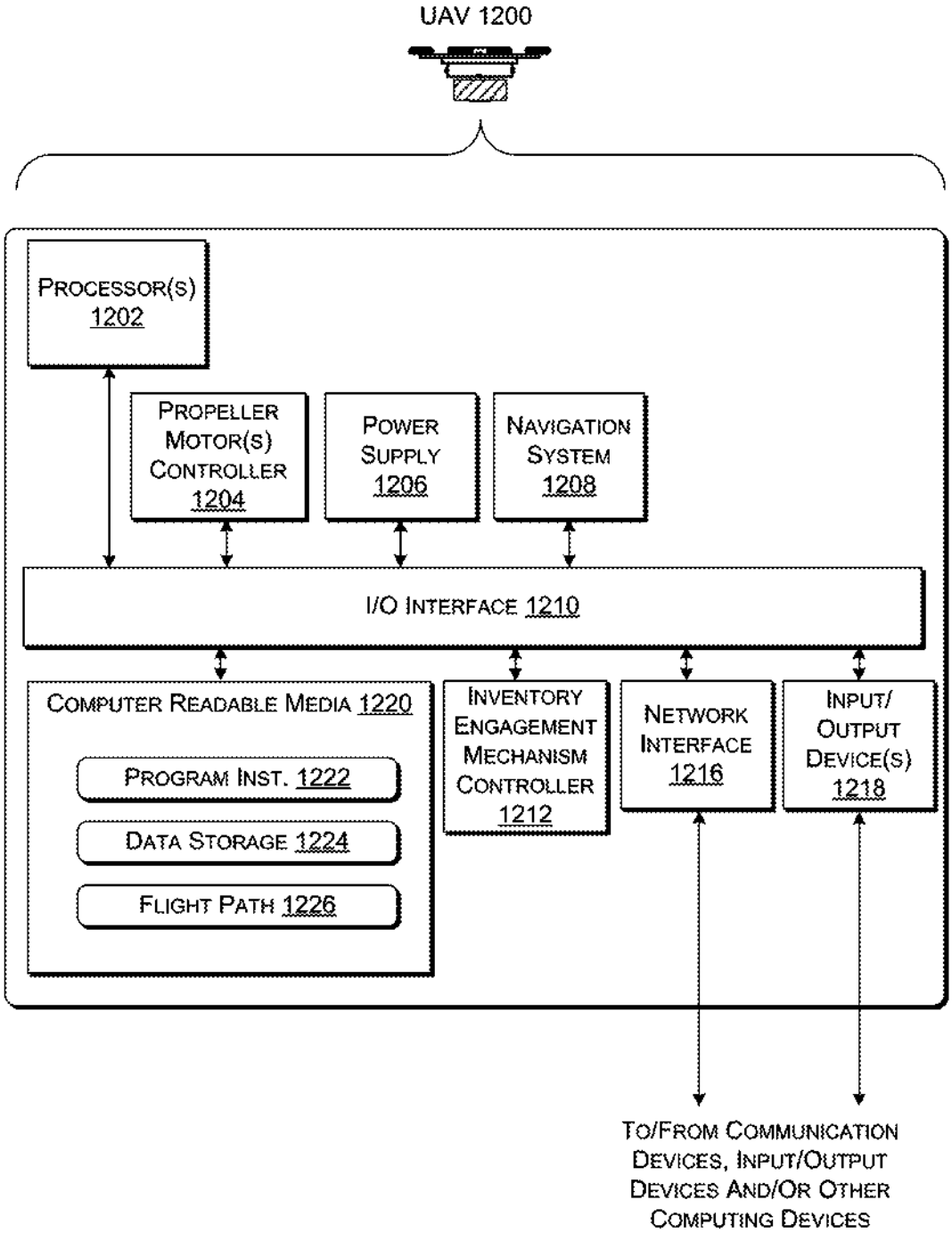
UAV 1200
PROCESSOR(S) 1202
PROPELLER MOTOR(S) CONTROLLER 1204
POWER SUPPLY 1206
NAVIGATION SYSTEM 1208
I/O INTERFACE 1210
COMPUTER READABLE MEDIA 1220
PROGRAM INST. 1222
DATA STORAGE 1224
FLIGHT PATH 1226
INVENTORY ENGAGEMENT MECHANISM CONTROLLER 1212
NETWORK INTERFACE 1216
INPUT/ OUTPUT DEVICE(S) 1218
TO/FROM COMMUNICATION DEVICES, INPUT/OUTPUT DEVICES AND/OR OTHER COMPUTING DEVICES

FIG. 12

REDUNDANT AIRCRAFT PROPULSION SYSTEM USING CO-ROTATING PROPELLERS JOINED BY TIP CONNECTORS

BACKGROUND

[0001] Conventional rotor-craft sometimes use multiple propellers (i.e., rotors) that are sometimes symmetrically located relative to a center of mass of the aircraft. Each propeller is coupled to a different drive shaft and powered by a different single motor using an electronic speed control (ESC), which controls the rotational speed of the motor, and thus the rotational speed of the propeller. Some rotor-crafts have four, six, eight, or more propellers.

[0002] When many propellers are used for propulsion of a rotor-craft, the rotor-craft may have some level or redundancy in case of failure of a motor or damage to a propeller. For example, an octocopter may continue controlled flight in the event of a failure of one of the motors that drive a particular propeller or damage to the particular propeller because the other seven propellers can typically maintain flight of the octocopter even when one propeller is no longer completely functional. However, rotor-craft having fewer propellers may not be able to maintain controlled flight in the event of a failure of a motor or damage to a propeller.

[0003] Propeller blades, like wings, create vortices during rotation of the propeller blades. The vortices create drag, which slows the propeller and causes inefficiency. In addition, propeller blades often create undesirable noise during operation at high rotational speeds at least partly due to airflow about the tips of blades of the propeller. When heavily loaded, propeller blades may deflect, which may reduce some efficiency of the propellers, and may even result in failure of the propeller if the deflection compromises the structural integrity of the propeller.

BRIEF DESCRIPTION OF THE DRAWINGS

[0004] The detailed description is described with reference to the accompanying figures. In the figures, the left-most digit(s) of a reference number identifies the figure in which the reference number first appears. The same reference numbers in different figures indicate similar or identical items.

[0005] FIG. **1**A is a perspective view of an illustrative redundant aircraft propulsion system using multiple motors to drive a single shaft coupled to a propeller.

[0006] FIG. **1**B is an exploded perspective view of the illustrative redundant aircraft propulsion system shown in FIG. **1**.

[0007] FIG. **2** is a perspective view of an illustrative redundant aircraft propulsion system using stacked multiple motors to drive a single shaft coupled to a propeller.

[0008] FIG. **3** is a perspective view of an illustrative redundant aircraft propulsion system using multiple motors that rotate cogwheels that engage a cogwheel on a shaft coupled to a propeller.

[0009] FIG. **4** is a flow diagram of illustrative operation of powering the motors of the redundant aircraft propulsion system in response to detecting a failure of a motor.

[0010] FIG. **5**A is a perspective view of an illustrative redundant aircraft propulsion system using multiple motors to drive a single shaft coupled to an illustrative closed propeller apparatus.

[0011] FIG. **5**B is a side elevation view of the redundant aircraft propulsion system shown in FIG. **5**A. The motors are positioned on opposite sides of the closed propeller apparatus.

[0012] FIG. **6** is a side elevation view of a redundant aircraft propulsion system having a single motor.

[0013] FIG. **7** is a side elevation view of a redundant aircraft propulsion system having motors positioned between the propellers.

[0014] FIG. **8** is a side elevation view of a redundant aircraft propulsion system having a single motor positioned between the propellers.

[0015] FIG. **9** is a side elevation view of a redundant aircraft propulsion system having a plurality of joints that enable variable pitch operation of at least one of the propellers.

[0016] FIG. **10**A-**10**C show illustrative co-propellers having an angle offset in the plane of rotation of the propellers. FIG. **10**A is a perspective view of the illustrative closed propeller apparatus, FIG. **10**B is a top plan view of the illustrative closed propeller apparatus, and FIG. **10**C is a side elevation view of the illustrative closed propeller apparatus.

[0017] FIG. **11**A-**11**C show illustrative co-propellers having different propellers blade profiles and configured in a closed configuration. FIG. **11**A is a perspective view of the illustrative closed propeller apparatus, FIG. **11**B is a top plan view of the illustrative closed propeller apparatus, and FIG. **11**C is a side elevation view of the illustrative closed propeller apparatus.

[0018] FIG. **12** is a block diagram of an illustrative unmanned aerial vehicle (UAV) **1200**.

DETAILED DESCRIPTION

[0019] This disclosure is directed to aircraft propulsion systems. In some embodiments, the aircraft propulsion systems may have redundancy based on use of multiple motors to drive (rotate) a single shaft coupled to a propeller. The motors may be selected such that a first motor is capable of rotating the drive shaft in an event of a failure of a second motor coupled to the drive shaft. A one-way clutch bearing, or similar device, may interface between a motor and the drive shaft to enable free rotation of the drive shaft in an event of the motor becoming inoperable, such as the motor freezing or locking in a position due to failure caused by overheating or caused by other conditions or events. Use of the second motor may secure a position of the drive shaft which may support the propeller in radial eccentric loading.

[0020] In various embodiments, the aircraft propulsion systems may have redundancy and/or achieve efficiencies using multiple propeller blades that are joined by tip connectors to form a closed propeller apparatus. The tip connectors may create continuous structure between adjacent tips of a first propeller and a second propeller. Use of the tip connectors may reduce vortices created near the tips of the propeller blades, which cause drag and slow the rotation of the propeller blades. The tip connectors may also reduce noise caused by rotation of propeller blades. Further, the tip connectors reduce or eliminate deflection of the propeller blades by creating a support structure to counteract forces that would otherwise cause deflection of the propeller blades, thereby improving propeller blade loading. Since both propellers are coupled together, the propellers will rotate at the same speed, which may eliminate a control

feature used in some implementations that attempt to match rotational speed of different propellers. In some embodiments, the tip connectors may be formed of a malleable material and/or include one or more joints that enable at least one of the propellers to modify a pitch of blades of the propeller.

[0021] The closed propeller apparatus may be employed using multiple motors to create redundancy in both the power source and also the physical structures, such as the propeller blades, the drive shaft, and other physical structures. For example, the closed propeller apparatus has increased structural rigidity due to the coupling of the propellers by the tip connectors and possibly by coupling of the propellers by the drive shaft. This increased structural rigidity may increase a durability of the propeller blades in the event that the propeller blades make contact with another object. The motors may be located adjacent to outside surfaces of the closed propeller apparatus or may be located between the propeller blades.

[0022] The apparatuses, systems, and techniques described herein may be implemented in a number of ways. Example implementations are provided below with reference to the figures.

[0023] FIG. **1**A is a perspective view of an illustrative redundant aircraft propulsion system **100**. The redundant aircraft propulsion system **100** may include using multiple motors **102** to rotate a drive shaft **104** coupled to a propeller **106**. Although the propeller **106** is shown as having two blades, the propeller **106** (and any other propeller described herein) may have more propeller blades, such as three blades, four blades, five blades, or more. The motors **102** may include a first motor **102(1)** and a second motor **102(2)**; however, additional motors may also be used in the redundant aircraft propulsion system **100** to achieve similar results. The motors **102** may be coupled to a frame **108**, such as a motor mounting spar, which enables the motors **102** to impart rotation of the drive shaft **104** and the propeller **106** relative to the frame **108**. The frame **108** may be a frame of an aircraft, such as an unmanned aerial vehicle (UAV), a helicopter, or other aircraft where the propeller **106** is used to propel the frame through air vertically, horizontally, or both. However, the frame **108** may be a frame for other devices, such as ground vehicles, maritime vessels, and/or stationary devices, such as fans.

[0024] Bearings **110** may be coupled to the drive shaft **104** and other structures, such as the motors **102** and/or the frame **108**. In some embodiments, a first bearing set **110(1)** is coupled between the first motor **102(1)** and the drive shaft **104** and a second bearing set **110(2)** is coupled between the second motor **102(2)** and the drive shaft **104**. The bearings **110** may enable free rotation of the drive shaft **104** in an event of one of the motors **102** (e.g., the first motor **102(1)**) becoming inoperable, such as the first motor **102(1)** freezing or locking in a position due to failure caused by overheating or caused by other conditions or events. In some embodiments, bearings may be coupled between the frame **108** and the drive shaft **104** to secure the drive shaft **104** in an axis **112** of rotation. In various embodiments, the motors **102** and/or the bearings **110** may secure the drive shaft **104** in the axis **112** of rotation. For example, use of the second motor **102(2)** or the second bearing **102(2)** in the configuration shown in FIG. **1**A may secure a position of the drive shaft **104** and support the propeller **106**, via the drive shaft **104**, during radial eccentric loading.

[0025] As shown in FIG. **1**A, the first motor **102(1)** may be located on a first side **114** of the propeller **106** while the second motor **102(2)** may be located on the second side **116** of the propeller **106**. However, the motors **102** may be located in other positions relative to the frame **108** and propeller. For example, the motors **102** are shown as located between opposing structures of the frame **108**; however, the motors **102** may be located outside the opposing structures of the frame **108**, for example. As another example, two more motors may be stacked on a same side of the propeller **106**.

[0026] During operation, the drive shaft **104** is subject to rotation up to a threshold number of revolutions per minute and up to a threshold torque, due to resistance caused by the propeller **106** moving air or other gases or fluids. The first motor **102(1)** and/or the second motor **102(2)** may be selected to operate at a maximum threshold torque that is less than the threshold torque, such that the combination of the motors **102** in operation reach or exceed design requirements for long term operation (e.g., continuous rotation of the drive shaft **104** and propeller **106** for up to a predetermined amount of time or indefinitely). In the event that one of the motors **102** becomes inoperable, the operational motor may continue to rotate the drive shaft **104** and the propeller **106**, but possibly for a time less than the predetermined amount of time. For example, a single motor may be operated for short periods of time at a capacity that results in excess heat, which if continued for more than a threshold amount of time, may cause the single motor to also fail and become inoperable. Thus, operation with a single motor may enable operations to be performed that do not require peak or near peak output (e.g., do not require lifting or climbing an aircraft in altitude), but may be used at lower outputs (e.g., to maintain a cruising altitude and/or successfully land an aircraft).

[0027] In some embodiments, three or more motors may be coupled to the drive shaft **104**. When one of the motors becomes inoperable, multiple motors may still operate to cause the rotation, which may enable use of motors having less power, such that a sum of the maximum output of the motors reaches or exceeds the threshold torque, but possibly exceeds the threshold torque by less than implementations where fewer motors are used in the redundant aircraft propulsion system **100**.

[0028] FIG. **1**B is an exploded perspective view of the illustrative redundant aircraft propulsion system **100** shown in FIG. **1**, which show an illustrative assembly of components of the redundant aircraft propulsion system **100**. As shown in FIG. **2**B, the first motor **102(1)** may be located proximate to a first portion **104(1)** of the drive shaft **104** while the second motor **102(2)** may be located proximate to a second portion **104(2)** of the drive shaft **104**.

[0029] The bearings **110(1)** and **110(2)** may include bearing housings **118** and a one-way clutch bearing **120**, which is configured to rotate freely in one direction and prevent rotation in a second direction that is opposite the first direction. Thus, the one-way clutch bearing **120** may prevent rotation (in the second direction), which enables a motor to impart rotational force to the drive shaft **104** via the one-way clutch bearing **120**. When a motor fails, the bearing freely rotates in the first direction as the other motor rotates the drive shaft **104**. The bearings **110(1)-(2)** may be barrel shaped or formed in other shapes to create a compact assembly or form-factor of the redundant aircraft propulsion

system **100**. In some embodiments, the bearings **110** may be integrated with the motors **102** in a custom motor implementation. Thus the motors **102** may include the one-way clutch bearing **120**, which may be coupled to the motor and possibly integrally formed with the motor prior to assembly of the redundant aircraft propulsion system **100**.

[0030] The motors **102** may be brushless direct current (DC) motors and/or other types of motors that generated a desired speed of rotation of the drive shaft at a torque experienced during typical operation (e.g., a maximum operational torque). However, other types of motors may be used, such as DC brush motors, alternating current (AC) motors, gasoline engines, and/or other types of rotation generating devices. In some embodiments, the first motor **102(1)** may be a different type of motor than the second motor **102(2)**. As discussed below, gearing systems may also be used, which may be included in the motors or driven by the motors.

[0031] The various components of the redundant aircraft propulsion system **100** may be coupled using any one of known coupling mechanisms and/or features, including threaded fasteners, adhesives, friction couplings, and/or other types of coupling mechanism/features.

[0032] FIG. **2** is a perspective view of an illustrative redundant aircraft propulsion system **200** using a stacked configuration of multiple motors to rotate the drive shaft **104** coupled to the propeller **106**. The first motor **102(1)** and the second motor **102(2)** may be located on a same side of the propeller **106**, such as on the second side **116** of the propeller **106**. The motors **102(1)-(2)** may be coupled to the frame **108**, possibly using a coupling support device **202**. The coupling support device **202** may secure a position of the first motor **102(1)** relative to the second motor **102(2)** and/or relative to the frame **108**. The redundant aircraft propulsion system **200** may include the bearings **110(1)-(2)**, which may be located between the respective motors and the drive shaft **104** to enable rotation of the drive shaft **104** in the event that one of the motors becomes inoperable. The motors **102(1)-(2)** and/or the bearings **110(1)-(2)** may secure the drive shaft **104** in the axis **112** of rotation.

[0033] The redundant aircraft propulsion system **200** may be used in configurations where a first side **114** of the propeller is not adjacent to the frame **108**, as shown in FIG. **2**. For example, when the propeller is used on a fore and/or aft side of a wing or fuselage of an aircraft and where the axis **112** is substantially aligned with the horizon of Earth during forward flight of the aircraft, the frame **108** may only be available for coupling on a single side of the propeller **106**.

[0034] FIG. **3** is a perspective view of an illustrative redundant aircraft propulsion system **300**. The redundant aircraft propulsion system **300** may include the first motors **102(1)** and the second motor **102(2)** which may rotate a first cogwheel **302(1)** and a second cogwheel **302(2)**, respectively, directly or using a shaft coupled to a respective cogwheel. The cogwheels **302(1)-(2)** may engage a drive shaft cogwheel **304** and cause rotation of the drive shaft cogwheel **304** when at least one of the motors **102(1)-(2)** is operational. The drive shaft cogwheel **304** is coupled to the drive shaft **104**, which is coupled to the propeller **106**. Thus, rotation of one or more of the cogwheels **302(1)-(2)** results in rotation of the propeller. The drive shaft **104** may be secured in the axis **112** of rotation by bearings **306**, which may be coupled to the frame **108**. Although both motors are shown in FIG. **3** as being located proximate to the second side **116** of the propeller **106**, the motors could be located on either side or on both sides (using another drive shaft cogwheel), and/or in other locations relative to the propeller **106** or the frame **108**.

[0035] The cogwheels **302(1)-(2)** may include cogs **308** that engage corresponding drive shaft cogs **310** on the drive shaft cogwheel **304**. The cogs **308** may be configured to engage the drive shaft teeth **310** during rotation of the cogwheels **302(1)-(2)** in a first direction **312** and not engage the drive shaft teeth **310** during rotation of the cogwheels **302(1)-(2)** in a second direction that is opposite the first direction **312** (from the perspective of the drive shaft cogwheel **304**). For example, the cogs **308** may be spring loaded and may only cause rotation of the drive shaft cogwheel **304**, via the drive shaft teeth **310**, during rotation in the first direction, but may be compressed by the drive shaft cogs **310** and not cause rotation of the drive shaft cogwheel **304** during rotation in the second direction (from the perspective of the drive shaft cogwheel **304**). Using the spring loaded cogs, or other mechanisms that create a similar effect, the drive shaft **104** may rotate even when one of the motors **102(1)-(2)** becomes inoperable. Other mechanisms may enable the drive shaft **104** may rotate even when one of the motors **102(1)-(2)** becomes inoperable, such as a mechanism that moves the inoperable motor and/or corresponding cogwheel to prevent the corresponding cogwheel from inhibiting rotation of the drive shaft cogwheel **304**, such as a clutch device.

[0036] In some embodiments, the cogwheels **302(1)-(2)** may use the one-way clutch bearings to enable rotation of a first motor in the event that a second motor becomes inoperable. The one-way clutch bearings may be employed as described above, such as by interfacing between respective motors and corresponding shafts that drive the respective cogwheels.

[0037] In some embodiments, the at least one of the cogwheel **302(1)**, the cogwheel **302(2)**, or both have a different number of cogs than the drive shaft cogwheel **304** to create a geared system. The geared system may enable gearing up or gearing down, and thus may increase or decrease a rotational speed of the drive shaft **104** compared to a rotational speed of one or both of the motors **102(1)-(2)**.

[0038] FIG. **4** is a flow diagram of illustrative process **400** of powering the motors of the redundant aircraft propulsion system in response to detecting a failure of a motor. The process **400** may be performed by any redundant aircraft propulsion system described herein that uses two or more motors to rotate a drive shaft coupled to a propeller. The process **400** is illustrated as a collection of blocks in a logical flow graph, which represent a sequence of operations that can be implemented in hardware, software, or a combination thereof. It should also be appreciated that the logical flow path depicted in FIG. **4** is not to be construed to indicate that the described process operations need be performed in any particular order unless otherwise expressly and unambiguously stated as such elsewhere herein. Stated alternatively, the logical flow paths herein represent but a few of many possible orders which the steps may be performed. In the context of software, the blocks represent computer-executable instructions stored on one or more computer-readable storage media (e.g., machine readable storage media) that, when executed by one or more hardware processors, perform the recited operations. Generally, computer-executable

instructions include routines, programs, objects, components, data structures, and the like that perform particular functions or implement particular abstract data types. Embodiments may be provided as a computer program product including a non-transitory computer-readable storage medium having stored thereon instructions (in compressed or uncompressed form) that may be used to program a computer (or other electronic device) to perform processes or methods described herein. The computer-readable storage medium may include, but is not limited to, hard drives, floppy diskettes, optical disks, CD-ROMs, DVDs, read-only memories (ROMs), random access memories (RAMs), EPROMs, EEPROMs, flash memory, magnetic or optical cards, solid-state memory devices, or other types of media/computer-readable medium suitable for storing electronic instructions. Further, embodiments may also be provided as a computer program product including a transitory machine-readable signal (in compressed or uncompressed form). Examples of machine-readable signals, whether modulated using a carrier or not, include, but are not limited to, signals that a computer system or machine hosting or running a computer program can be configured to access, including signals downloaded. The order in which the operations are described is not intended to be construed as a limitation, and any number of the described blocks can be combined in any order and/or in parallel to implement the process **400**.

[0039] At **402**, one or more controllers, such as electronic speed controls (ESCs), may power the first motor **102(1)** and the second motor **102(2)** to cause rotation of the drive shaft **104** and rotation of the propeller **106** as described above. The motors may be powered at a first power setting.

[0040] At **404**, the one or more controllers, a feedback circuit, and/or other device may detect failure of a motor, such as the first motor **102(1)**. However, the process works similarly upon failure of the second motor **102(2)**. The failure of the motor may cause the motor to be inoperable, and possibly be jammed, frozen, or otherwise incapable of rotation.

[0041] At **406**, the one or more controllers may increase a power setting of the second motor **102(2)** in response to the detection at the operation **404**. The increase may cause the second motor to operate at more revolutions per minute for a given input than the first power setting used at the operation **402**. By increasing the power setting for the second motor, the second motor may continue to rotate the drive shaft at a rotational speed that maintains a desired operation, such as continued flight of an aircraft, for example. In some embodiments where a feedback loop is used to determine a rotational speed of the drive shaft, the operation **406** may be omitted.

[0042] At **408**, the one or more controllers, such as electronic speed controls (ESCs), may power the second motor **102(2)** at the increased power setting to cause rotation of the drive shaft **104** and rotation of the propeller **106** as described above, even when the first motor **102(1)** is inoperable (e.g., frozen, nonfunctional, etc.). As described above, one-way clutch bearings, or other devices described herein that produce a similar effect, may enable the drive shaft to freely rotate despite the inoperability of the first motor.

[0043] At **410**, the one or more controllers may update a flight plan when the motors operate a propeller of an aircraft. The update of the flight plan may include causing aircraft to execute a landing and/or limiting or updating performance expectations/thresholds for the aircraft (e g, limiting climbing and/or limiting other power intensive operations). In some embodiments, the second motor **102(2)** may be powerful enough to continue flight of an aircraft without any change or without any significant change in the flight plan, such as when the second motor **102(2)** is configured to operate at a maximum threshold torque that is less than a threshold torque, where the drive shaft is subject to rotation up to a threshold number of revolutions per minute and up to the threshold torque.

[0044] FIG. **5A** is a perspective view of an illustrative redundant aircraft propulsion system **500**. The redundant aircraft propulsion system **500** includes a closed propeller apparatus **502** that includes a first propeller **504** (sometimes referred to herein as a top propeller) coupled to a second propeller **506** (sometimes referred to herein as a bottom propeller) by a first tip connector **508(1)** and a second tip connector **508(2)**. The first tip connector **508(1)** may couple a first tip **510** of the first propeller **504** to a second tip **512** of the second propeller **506** to create a continuous structure joining the first propeller **504** to the second propeller **506**. Likewise, the second tip connector **508(2)** may couple adjacent tips of the propellers **504**, **506**. A cross-section of the tip connectors may resemble a tear drop or other aerodynamic profile that has minimal drag while having structural rigidity.

[0045] Although the first propeller **504** and the second propeller **5069** are shown as having two blades, the propellers (and any other propeller described herein) may have more propeller blades, such as three blades, four blades, five blades, or more, which may be coupled together in a similar manner using corresponding tip connectors. A distance between the first propeller **504** and the second propeller **506** may be selected to create optimal thrust from the respective propellers.

[0046] Use of the tip connectors **508(1)-(2)** may reduce vortices created near the tips **510**, **512** of the propellers **504**, **506**, which cause drag and slow the rotation of the propeller blades. The tip connectors **508(1)-(2)** may also reduce noise caused by rotation of propellers. Further, the tip connectors **508(1)-(2)** reduce or eliminate deflection of the propellers by creating a support structure to counteract forces that would otherwise cause deflection of the propellers, thereby improving propeller blade loading. Since both propellers are coupled together, the propellers will rotate at the same speed, which may eliminate a control feature used in some implementations that attempt to match rotational speed of different propellers. In some embodiments, the tip connectors **508(1)-(2)** may be formed of a malleable material and/or include one or more joints that enable at least one of the propellers to modify a pitch of blades of the propeller.

[0047] As shown in FIG. **5A**, the first propeller **504** and the second propeller **506** may rotate about the same axis **112** and may rotate in rotational planes that are parallel to one other. The closed propeller apparatus **502** may include the drive shaft **104**, which may be coupled to the closed propeller apparatus **502**, and possibly integrally formed with the closed propeller apparatus **502**. The drive shaft **104** may create additional supporting structure for the closed propeller apparatus **502**, which is in addition to the tip connectors **508(1)-(2)**, which also provide supporting structure for the closed propeller apparatus **502**.

[0048] The drive shaft **104** may be coupled to the motors **102(1)-(2)**, possibly via the one-directional clutch bearings **110(1)-(2)**, as discussed above with reference to FIG. **1A**. In

some embodiments, the redundant aircraft propulsion system **500** may include a single motor to rotate the drive shaft **104** and, therefore, may not have the motor redundancy as described above with reference FIG. **1**A.

[0049] FIG. **5**B is a side elevation view of the redundant aircraft propulsion system **500** shown in FIG. **5**A. The first propeller **504** may include a first pitch **514** while the second propeller **506** may include a second pitch **516**. The pitch may be an angle of propeller blades rotated about an axis that is perpendicular to a line tangent to the drive shaft. The greater the pitch, the more air the propeller blades move during rotation.

[0050] In some embodiments, the first pitch **514** and the second pitch **516** may be fixed pitches and thus not configured for movement of propeller blades with respect to a spinner (hub) or axis of rotation. The first pitch **514** and the second pitch **516** may or may not be equivalent. For example, the first pitch **514** may have a lesser angle (and thus move less air) than the second pitch **516**. However, the first pitch **514** may be greater than the second pitch **516** in some implementations. Use of propellers having different blade designs or profiles is discussed in more detail with reference to FIGS. **11**A-C.

[0051] In various embodiments, the first propeller **504**, the second propeller **506**, or both may be configured for variable pitch, such as by use of actuators that cause a pitch (or angle) of propeller blades to change relative to the spinner (hub) by mechanically rotating the blades about an axis that is perpendicular to a line tangent to the drive shaft. In such embodiments, the tip connectors **508**(**1**)-(**2**) may include malleable portions **518** which may enable a change in the pitch of the blades of the first propeller **504**, the second propeller **506**, or both. The malleable structure **518** may be formed of rubber, plastic, and/or other malleable substances that enable some deformation while still providing compression forces against the respective propellers and while generally maintaining a design profile, such as curved radiuses **520**. The curved radiuses **520** may be selected to minimize drag and/or minimize noise caused during rotation of the closed propeller apparatus **502**. Thus, the malleable structure **518** enables movement of the pitch of the blades while maintaining the continuous structure joining the first propeller **504** and the second propeller **506**. In various embodiments, the malleable structure **518** may enable a dynamic change to an offset between the first blade **504** and the second blade **506**, which may be performed based on a rotational speed of the closed propeller apparatus, for example. Actuators may be used to move the propellers together or apart to vary the offset.

[0052] FIG. **6** is a side elevation view of a redundant aircraft propulsion system **600** having a single motor **602**. As shown, the redundant aircraft propulsion system **600** may include the frame **108** on a first side of the closed propeller apparatus **502** that is used in part to secure the motor **602**. The drive shaft **104** may or may not extend between the first propeller **504** and the second propeller **506**. For example, when the drive shaft **104** does not extend between the propellers, the tip connectors **508**(**1**)-(**2**) may transfer rotation imparted by the motor **602** to the first propeller **504** when the motor **602** causes the second propeller **506** to rotate.

[0053] FIG. **7** is a side elevation view of a redundant aircraft propulsion system **700**. The redundant aircraft propulsion system **700** may include the first motor **102**(**1**) and the second motor **102**(**2**) located between the first propeller **504** and the second propeller **506**. Location of the motors between the propellers may enable a smaller form factor (or envelope) to contain the redundant aircraft propulsion system **700**. In some embodiments, the redundant aircraft propulsion system **700** may include the one-way clutch bearings **110**(**1**)-(**2**), which may be located between the motors and the propellers.

[0054] The redundant aircraft propulsion system **700** may include bearings **702** to secure a drive shaft **704** along the axis **112** of rotation. The drive shaft **704** may include a fixed body, possibly within a rotatable exterior body of the drive shaft **704**, which is stationary and used to fix the motors to the frame **108**. The fixed body may be used to power the motors while the rotatable exterior body may be coupled to the propellers and/or the one-way clutch bearings **110**(**1**)-(**2**) to cause rotation thereof. However, other configurations may be used for the drive shaft **704**, such as a configuration that has the fixed body outside of a rotating inner body.

[0055] FIG. **8** is a side elevation view of a redundant aircraft propulsion system **800** having a single motor **802** positioned between the co-rotating propellers. In some embodiments, the single motor may be located outside of the closed propeller apparatus **502** rather than between the propellers **504**, **506**. In such instances, the frame **108** may not include a support on each side of the closed propeller apparatus **502**.

[0056] FIG. **9** is a side elevation view of a redundant aircraft propulsion system **900** having a plurality of joints that enable variable pitch operation of at least one of the propellers. In various embodiments, the first propeller **504**, the second propeller **506**, or both may be configured for variable pitch, such as by use of actuators that cause a pitch (or angle) of propeller blades to change by mechanically rotating the blades about an axis that is perpendicular to a line tangent to the drive shaft. In such embodiments, a first joint **902** may be located on the tip connector **508**(**1**) or between the tip connector **508**(**1**) and the first tip **510**. A second joint **904** may be located on the tip connector **508**(**2**) or between the tip connector **508**(**2**) and the second tip **512**. Additional joints may be used to enable a smooth and continuous shape of the tip connectors **508**(**1**)-(**2**), even after a change in pitch of one or more propeller blades. The additional joints may also be used to create a linkage as discussed below. In some embodiments, the joints may form a chain-like linkage that comprises many different movable parts.

[0057] The joints **902**, **904** may enable a change in the pitch of the blades of the first propeller **504**, the second propeller **506**, or both. The joints **902**, **904** may permit a change in the pitch of blades while generally maintaining a design profile of the closed propeller apparatus **502**, such as the curved radiuses **520**. The curved radiuses **520** may be selected to minimize drag and/or minimize noise caused during rotation of the closed propeller apparatus **502**. Thus, the joints **902**, **904** enable movement of the pitch of the blades while maintaining the continuous structure joining the first propeller **504** and the second propeller **506**. In some embodiments, the joints **902**, **904** may create a linkage system that enables a single actuator or actuators of the first propeller **504** to modify the pitch of blades of the second propeller **506** by mechanically transferring the changes of the pitch from the first propeller **504** to the second propeller.

[0058] In some embodiments, the joints **902**, **904** may enable rotation of the tip connector **508(1)**, the tip connector **504(2)**, or both in a way that causes an air break, which may act to slow the rotational speed of the closed propeller apparatus **502**. In various embodiments, modifications to the angle or orientation of the tip connectors relative to the propellers **504**,**506** may also result in different amounts of noise being generated during rotation of the closed propeller apparatus **502**. In various embodiments, the joints **902**, **904** may enable a dynamic change to an offset between the first blade **504** and the second blade **506**, which may be performed based on a rotational speed of the closed propeller apparatus, for example. Actuators may be used to move the propellers together or apart to vary the offset.

[0059] FIG. **10A-10C** show an illustrative closed propeller apparatus **1000**. FIG. **10A** is a perspective view of the closed propeller apparatus. As shown in FIG. **10A**, the closed propeller apparatus **1000** may include the first propeller **504** and the second propeller **506** that are connected at tips via tip connectors **1002(1)** and **1002(2)**, which create a continuous structure, similar to the tip connectors **508(1)-(2)**.

[0060] The first propeller **504** may include a first longitudinal axis **1004** while the second propeller **506** may include a second longitudinal axis **1006**. As shown in FIG. **10B**, which is a top plan view of the closed propeller apparatus **1000**, the first longitudinal axis **1004** may include an angle offset a **1008** such that the second propeller **506** trails the first propeller **504** during rotation of the closed propeller apparatus **1000**. However, in some embodiments, the angle offset a **1008** may be configured such that the first propeller **504** trails the second propeller **506** during rotation of the closed propeller apparatus **1000**. FIG. **10C** is a side elevation view of the closed propeller apparatus **1000**. Stated another way, the angle offset a **1008** is an angular difference of the first propeller **504** and the second propeller **506** in a plane of rotation of the propellers. When the angle offset a **1008** is greater than zero, the first longitudinal axis **1004** is not parallel to the second longitudinal axis **1006**.

[0061] The angle offset a **1008** may cause the second propeller **506** to move thorough laminar or "cleaner" air than would otherwise happen when no angular offset is used (e.g., $\alpha=0$). The angle offset a **1008** may be any angle up to 90 degrees, however, angles over 45 degrees may be impractical due to constraints in creating long versions of the tip connectors **1002(1)-(2)** to span across such a distance and the extra weight and complexity involved with such a design. The angle offset a **1008** may be selected to create optimal thrust from the respective propellers. The use of the angle offset may also be incorporated with any of the other features discussed herein, including use of variable pitch or different propeller blade profiles (or designs), which is discussed immediately below.

[0062] FIG. **11A-11C** show illustrative closed propeller apparatus **1100**. The closed propeller apparatus **1100** includes different propellers blade profiles. FIG. **11A** is a perspective view of the closed propeller apparatus **1100**. As shown in FIG. **11A**, the closed propeller apparatus **1100** may include the first propeller **504** and the second propeller **506** that are connected at tips via tip connectors **1102(1)** and **1102(2)**, which create a continuous structure, similar to the tip connectors **508(1)-(2)**.

[0063] The first propeller **504** may include a first blade profile (or design) **1104** while the second propeller **506** may include a second blade profile (or design) **1106**. The blade designs may cause the propeller to move air in a different way, which when properly tuned, may increase thrust generated by the closed propeller apparatus **1100**.

[0064] FIG. **11B** is a top plan view of the closed propeller apparatus **1100**, while FIG. **11C** is a side elevation view of the closed propeller apparatus **1100**. The blade designs for the first propeller **504** and the second propeller **506** may be selected to create optimal thrust from the respective propellers. In some embodiments, the blade profile may include a pitch of the blade, a length of the blade, a length of a pitched portion of the blade, a radius of the blade's leading edge and/or trailing edge, and/or other design factors for propeller blades.

[0065] FIG. **12** is a block diagram of an illustrative unmanned aerial vehicle (UAV) **1200**. The UAV **1200** may be used to implement the various systems, devices, and techniques discussed above. In the illustrated implementation, the UAV **1200** includes one or more processors **1202**, coupled to a non-transitory computer readable media **1220** via an input/output (I/O) interface **1210**. The UAV **1200** may also include a propeller motor controller **1204**, power supply module **1206** and/or a navigation system **1208**. The UAV **1200** further includes an inventory engagement mechanism controller **1212**, a network interface **1216**, and one or more input/output devices **1218**.

[0066] In various implementations, the UAV **1200** may be implemented using a uniprocessor system including one processor **1202**, or a multiprocessor system including several processors **1202** (e.g., two, four, eight, or another suitable number). The processor(s) **1202** may be any suitable processor capable of executing instructions. For example, in various implementations, the processor(s) **1202** may be general-purpose or embedded processors implementing any of a variety of instruction set architectures (ISAs), such as the x86, PowerPC, SPARC, or MIPS ISAs, or any other suitable ISA. In multiprocessor systems, each processor(s) **1202** may commonly, but not necessarily, implement the same ISA.

[0067] The non-transitory computer readable media **1220** may be configured to store executable instructions/modules, data, flight paths, and/or data items accessible by the processor(s) **1202**. In various implementations, the non-transitory computer readable media **1220** may be implemented using any suitable memory technology, such as static random access memory (SRAM), synchronous dynamic RAM (SDRAM), nonvolatile/Flash-type memory, or any other type of memory. In the illustrated implementation, program instructions and data implementing desired functions, such as those described above, are shown stored within the non-transitory computer readable memory as program instructions **1222**, data storage **1224** and flight path data **1226**, respectively. In other implementations, program instructions, data and/or flight paths may be received, sent or stored upon different types of computer-accessible media, such as non-transitory media, or on similar media separate from the non-transitory computer readable media **1220** or the UAV **1200**. Generally speaking, a non-transitory, computer readable memory may include storage media or memory media such as flash memory (e.g., solid state memory), magnetic or optical media (e.g., disk) coupled to the UAV **1200** via the I/O interface **1210**. Program instructions and data stored via a non-transitory computer readable medium may be transmitted by transmission media or signals such as electrical, electromagnetic, or digital signals,

which may be conveyed via a communication medium such as a network and/or a wireless link, such as may be implemented via the network interface **1216**.

[0068] In one implementation, the I/O interface **1210** may be configured to coordinate I/O traffic between the processor (s) **1202**, the non-transitory computer readable media **1220**, and any peripheral devices, the network interface or other peripheral interfaces, such as input/output devices **1218**. In some implementations, the I/O interface **1210** may perform any necessary protocol, timing or other data transformations to convert data signals from one component (e.g., non-transitory computer readable media **1220**) into a format suitable for use by another component (e.g., processor(s) **1202**). In some implementations, the I/O interface **1210** may include support for devices attached through various types of peripheral buses, such as a variant of the Peripheral Component Interconnect (PCI) bus standard or the Universal Serial Bus (USB) standard, for example. In some implementations, the function of the I/O interface **1210** may be split into two or more separate components, such as a north bridge and a south bridge, for example. Also, in some implementations, some or all of the functionality of the I/O interface **1210**, such as an interface to the non-transitory computer readable media **1220**, may be incorporated directly into the processor(s) **1202**.

[0069] The propeller motor(s) controller **1204** communicates with the navigation system **1208** and adjusts the power of each propeller motor to guide the UAV along a determined flight path. The power supply module **1206** may control the charging and any switching functions associated with one or more power modules (e.g., batteries) of the UAV.

[0070] The navigation system **1208** may include a GPS or other similar system that can be used to navigate the UAV to and/or from a location. The inventory engagement mechanism controller **1212** communicates with the actuator(s) or motor(s) (e.g., a servo motor) used to engage and/or disengage inventory. For example, when the UAV is positioned over a level surface at a delivery location, the inventory engagement mechanism controller **1212** may provide an instruction to a motor that controls the inventory engagement mechanism to release the inventory.

[0071] The network interface **1216** may be configured to allow data to be exchanged between the UAV **1200**, other devices attached to a network, such as other computer systems, and/or with UAV control systems of other UAVs. For example, the network interface **1216** may enable wireless communication between numerous UAVs. In various implementations, the network interface **1216** may support communication via wireless general data networks, such as a Wi-Fi network. For example, the network interface **1216** may support communication via telecommunications networks such as cellular communication networks, satellite networks, and the like.

[0072] Input/output devices **1218** may, in some implementations, include image capture devices, infrared sensors, time of flight sensors, accelerometers, lights, speakers, and other input/output devices commonly used in aviation. Multiple input/output devices **1218** may be present and controlled by the UAV **1200**. One or more of these sensors may be utilized to assist in landings as well as avoiding obstacles during flight.

[0073] In various implementations, the parameter values and other data illustrated herein as being included in one or more data stores may be combined with other information not described or may be partitioned differently into more, fewer, or different data structures. In some implementations, data stores may be physically located in one memory or may be distributed among two or more memories.

[0074] Those skilled in the art will appreciate that the UAV **1200** is merely illustrative and is not intended to limit the scope of the present disclosure. In particular, the computing system and devices may include any combination of hardware or software that can perform the indicated functions, including computers, network devices, internet appliances, PDAs, wireless phones, pagers, etc. The UAV **1200** may also be connected to other devices that are not illustrated, or instead may operate as a stand-alone system. In addition, the functionality provided by the illustrated components may in some implementations be combined in fewer components or distributed in additional components. Similarly, in some implementations, the functionality of some of the illustrated components may not be provided and/or other additional functionality may be available.

[0075] Those skilled in the art will also appreciate that, while various items are illustrated as being stored in memory or storage while being used, these items or portions of them may be transferred between memory and other storage devices for purposes of memory management and data integrity. Alternatively, in other implementations, some or all of the software components may execute in memory on another device and communicate with the illustrated UAV **1200**. Some or all of the system components or data structures may also be stored (e.g., as instructions or structured data) on a non-transitory, computer-accessible medium or a portable article to be read by an appropriate drive, various examples of which are described above. In some implementations, instructions stored on a computer-accessible medium separate from the UAV **1200** may be transmitted to the UAV **1200** via transmission media or signals such as electrical, electromagnetic, or digital signals, conveyed via a communication medium such as a wireless link. Various implementations may further include receiving, sending or storing instructions and/or data implemented in accordance with the foregoing description upon a computer-accessible medium. Accordingly, the techniques described herein may be practiced with other UAV control system configurations.

[0076] Although the subject matter has been described in language specific to structural features and/or methodological acts, it is to be understood that the subject matter defined in the appended claims is not necessarily limited to the specific features or acts described. Rather, the specific features and acts are disclosed as illustrative forms of implementing the claims.

What is claimed is:

1. A propulsion device comprising:

a drive shaft;

a top propeller coupled to the drive shaft, the top propeller including a top first tip and a top second tip located at opposite ends of the top propeller;

a bottom propeller coupled to the drive shaft, the bottom propeller including a bottom first tip and a bottom second tip located at opposite ends of the bottom propeller;

a first tip connector that extends between the top first tip and the bottom first tip;

a second tip connector that extends between the top second tip and the bottom second tip, the first tip

connector and the second tip connector creating continuous structure joining the top propeller and the bottom propeller; and

a motor coupled to the drive shaft to rotate the drive shaft, the top propeller and the bottom propeller.

2. The propulsion device as recited in claim **1**, wherein at least one of the top propeller or the bottom propeller is configured to vary a pitch of blades, and wherein the first tip connector and the second tip connector comprise at least one of:

a malleable portion of structure that enables movement of the pitch of the blades while maintaining the continuous structure joining the top propeller and the bottom propeller; or

one or more joints that enable movement of the pitch of the blades while maintaining the continuous structure joining the top propeller and the bottom propeller.

3. The propulsion device as recited in claim **1**, wherein the top propeller includes a top longitudinal axis and the bottom propeller includes a bottom longitudinal axis that is non-parallel to the top longitudinal axis.

4. The propulsion device as recited in claim **1**, wherein the top propeller includes a top blade profile that is different than a bottom blade profile of the bottom propeller.

5. The propulsion device as recited in claim **1**, wherein the motor is a first motor, and further comprising second motor coupled to the drive shaft, wherein the first motor is located proximate to the top propeller and the second motor is located proximate to the bottom propeller.

6. An apparatus comprising:

a first propeller including a first tip and a second tip located at opposite ends of the first propeller, the first propeller associated with a first plane of rotation;

a second propeller including a third tip and a fourth tip located at opposite ends of the second propeller, the second propeller associated with a second plane of rotation that is parallel to the first plane of rotation;

a first tip connector that extends between the first tip and the third tip; and

a second tip connector that extends between the second tip and the fourth tip, the first tip connector and the second tip connector creating continuous structure joining the first propeller and the second propeller.

7. The apparatus as recited in claim **6**, further comprising a drive shaft that couples the first propeller to the second propeller at an axis of rotation of the first and second propeller.

8. The apparatus as recited in claim **7**, wherein the drive shaft includes a first portion that extends outward from a first side of the first propeller and a second portion that extends outward from a second side of the second propeller that is opposite the first side of the first propeller, and further comprising:

a first motor coupled to the first portion of the drive shaft; and

a second motor coupled to the second portion of the drive shaft.

9. The apparatus as recited in claim **8**, further comprising:

a first one-way clutch bearing coupled between the first motor and the drive shaft, wherein the first one-way clutch bearing enables the second motor to rotate the drive shaft when the first motor is inoperable; and

a second one-way clutch bearing coupled between the second motor and the drive shaft, wherein the second one-way clutch bearing enables the first motor to rotate the drive shaft when the second motor is inoperable.

10. The apparatus as recited in claim **6**, further comprising:

a drive shaft that couples the first propeller to the second propeller;

a first frame member;

a first motor coupled to the drive shaft and the first frame member to cause rotation of the drive shaft relative to the first frame member; and

a second frame member; and

a second motor is coupled to the drive shaft and the second frame member to cause rotation of the drive shaft relative to the second frame member,

wherein at least one of the first motor and the second motor is located between the first propeller and the second propeller.

11. The apparatus as recited in claim **6**, wherein the first propeller is configured to vary a pitch of blades, and wherein the first tip connector and the second tip connector are formed of a malleable material configured to permit movement of the pitch of the blades while maintaining the continuous structure joining the first propeller and the second propeller.

12. The apparatus as recited in claim **6**, wherein the first propeller is configured to vary a pitch of blades, and wherein the first tip connector and the second tip connector include one or more joints that enable movement of the pitch of the blades while maintaining the continuous structure joining the first propeller and the second propeller.

13. The apparatus as recited in claim **6**, wherein the first propeller includes a first blade profile that is different than a second blade profile of the second propeller.

14. The apparatus as recited in claim **6**, wherein the first propeller includes an angle offset from the second propeller in the first plane of rotation of the first propeller, the angle offset causing the first propeller to trail the second propeller during rotation.

15. An unmanned aerial vehicle (UAV) comprising:

a frame;

a power source coupled to the frame; and

at least one propulsion unit coupled to the frame and connected to the power source, wherein at least one propulsion unit includes:

a first propeller including a first tip and a second tip located at opposite ends of the first propeller, the first propeller associated with a first plane of rotation;

a second propeller including a third tip and a fourth tip located at opposite ends of the second propeller, the second propeller associated with a second plane of rotation;

a first tip connector that extends between the first tip and the third tip;

a second tip connector that extends between the second tip and the fourth tip, the first tip connector and the second tip connector creating continuous structure joining the first propeller and the second propeller;

a drive shaft that couples the first propeller to the second propeller; and

a motor assembly coupled to the frame and the drive shaft, the motor powered by the power source and configured to rotate the drive shaft.

16. The UAV as recited in claim **15**, wherein:

the motor assembly comprises a first motor and a second motor,

the drive shaft includes a first portion that extends outward from a first side of the first propeller and a second portion that extends outward from a second side of the second propeller that is opposite the first side of the first propeller, and

the first motor is coupled to the first portion of the drive shaft; and

the second motor coupled to the second portion of the drive shaft.

17. The UAV as recited in claim **15**, wherein the first propeller is configured to vary a pitch of blades, and wherein the first tip connector and the second tip connector are formed of a malleable material configured to permit movement of the pitch of the blades while maintaining the continuous structure joining the first propeller and the second propeller.

18. The UAV as recited in claim **15**, wherein the first propeller includes blades having a first pitch that is different than a second pitch of blades of the second propeller.

19. The UAV as recited in claim **15**, wherein the first propeller includes an angle offset from the second propeller in the plane of rotation of the first propeller.

20. The UAV as recited in claim **15**, wherein the first propeller includes a first blade profile that is different than a second blade profile of the second propeller.

* * * * *

(12) INTERNATIONAL APPLICATION PUBLISHED UNDER THE PATENT COOPERATION TREATY (PCT)

(19) World Intellectual Property Organization
International Bureau

(43) International Publication Date
18 May 2017 (18.05.2017)

WIPO | PCT

(10) International Publication Number
WO 2017/081668 A1

(51) International Patent Classification:
B64C 39/02 (2006.01) *B60F 5/02* (2006.01)

(21) International Application Number:
PCT/IB2016/056829

(22) International Filing Date:
12 November 2016 (12.11.2016)

(25) Filing Language: English

(26) Publication Language: English

(30) Priority Data:
14/940,379 13 November 2015 (13.11.2015) US

(72) Inventors; and
(71) Applicants : **ZHOU, Dylan** [CN/CN]; 1550 G. Tiburon Blvd #639, Belvedere Tiburon, California 94920 (US). **ZHOU, Andrew** [CN/CN]; One Blackfield, Suite 416, Tiburon, California 94920 (US). **ZHOU, Tiger** [CN/CN]; One Blackfield, Suite 416, Tiburon, California 94920 (US).

(81) Designated States *(unless otherwise indicated, for every kind of national protection available)*: AE, AG, AL, AM, AO, AT, AU, AZ, BA, BB, BG, BH, BN, BR, BW, BY, BZ, CA, CH, CL, CN, CO, CR, CU, CZ, DE, DJ, DK, DM, DO, DZ, EC, EE, EG, ES, FI, GB, GD, GE, GH, GM, GT, HN, HR, HU, ID, IL, IN, IR, IS, JP, KE, KG, KN, KP, KR, KW, KZ, LA, LC, LK, LR, LS, LU, LY, MA, MD, ME, MG, MK, MN, MW, MX, MY, MZ, NA, NG, NI, NO, NZ, OM, PA, PE, PG, PH, PL, PT, QA, RO, RS, RU, RW, SA, SC, SD, SE, SG, SK, SL, SM, ST, SV, SY, TH, TJ, TM, TN, TR, TT, TZ, UA, UG, US, UZ, VC, VN, ZA, ZM, ZW.

(84) Designated States *(unless otherwise indicated, for every kind of regional protection available)*: ARIPO (BW, GH, GM, KE, LR, LS, MW, MZ, NA, RW, SD, SL, ST, SZ, TZ, UG, ZM, ZW), Eurasian (AM, AZ, BY, KG, KZ, RU, TJ, TM), European (AL, AT, BE, BG, CH, CY, CZ, DE, DK, EE, ES, FI, FR, GB, GR, HR, HU, IE, IS, IT, LT, LU, LV, MC, MK, MT, NL, NO, PL, PT, RO, RS, SE, SI, SK, SM, TR), OAPI (BF, BJ, CF, CG, CI, CM, GA, GN, GQ, GW, KM, ML, MR, NE, SN, TD, TG).

Published:

— *with international search report (Art. 21(3))*

— *before the expiration of the time limit for amending the claims and to be republished in the event of receipt of amendments (Rule 48.2(h))*

(54) **Title**: AMPHIBIOUS VERTICAL TAKEOFF AND LANDING UNMANNED SYSTEM AND FLYING CAR WITH MULTIPLE AERIAL AND AQUATIC FLIGHT MODES FOR CAPTURING PANORAMIC VIRTUAL REALITY VIEWS, INTERACTIVE VIDEO AND TRANSPORTATION WITH MOBILE AND WEARABLE APPLICATION

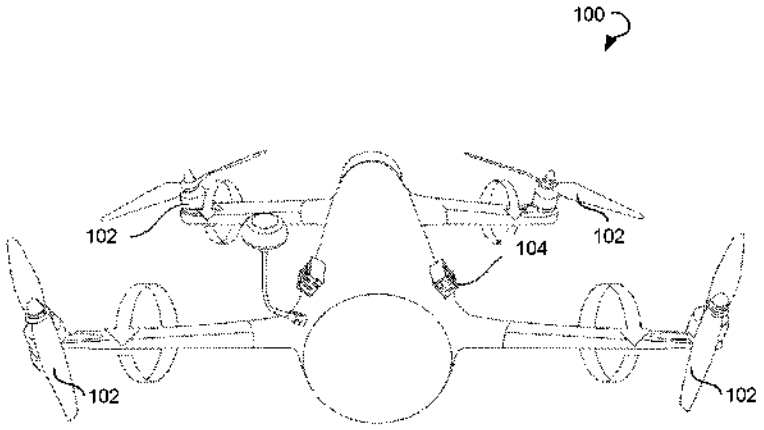

FIG. 1

(57) **Abstract**: An amphibious vertical takeoff and landing unmanned device comprises a modular and expandable waterproof body (802), a chassis (804), an outer body shell (806), a propulsion system, a propeller protection system, a surface skidding material platform, a landing system, control surfaces, a ballast, an onboard air compressor, an onboard electrolysis system, a waterproof through-body wire or antenna feed-through, a single or multiple-axis tilt-motor device (1025), a tilt fuselage device, a tilt wing device (1015), a battery, a power distribution board, a Global Positioning System module, a lost model alert, a cooling device (1041), a detachable impact absorbing skin or shell, vision aiding and orientative lights, hatches, quick connect payloads, a lap counter for racing, a flat or inclined launch platform or footing, claws, an apparatus for externally attaching and internally housing a cargo, a charging station, a partial vacuum device, a manually or automatically deployable parachute (1130), and an onboard or ground station electricity generator. A video capture, realtime broadcast, and video downlink system for an amphibious VTOL unmanned device and a collision avoidance, flight stabilization, and multi-rotor control system for an amphibious VTOL unmanned device are also provided.

WO 2017/081668 A1

AMPHIBIOUS VERTICAL TAKEOFF AND LANDING UNMANNED SYSTEM AND FLYING CAR WITH MULTIPLE AERIAL AND AQUATIC FLIGHT MODES FOR CAPTURING PANORAMIC VIRTUAL REALITY VIEWS, INTERACTIVE VIDEO AND TRANSPORTATION WITH MOBILE AND WEARABLE APPLICATION

FIELD

[0001] This application relates generally to unmanned systems and, more specifically, to tilt wing, tilt fuselage, and tilt rotor systems capable of navigating underwater and in the air with mobile application and wearable application.

BACKGROUND

[0002] Conventional unmanned fixed rotor aerial vehicles belong to one of two categories: multi rotor or plane. A fixed rotor multi rotor generates lift by propelling air below itself, thereby eliminating the need for a runway or launching mechanism to take off. Fixed rotor multi rotors move in the X and Y axis by variable thrust, and yaw on the Z axis by counter rotating torque. When accelerating in the Y axis, multi copter operators find their field of view dominated by the ground, because the onboard cameras for first person view point downwards when the multi copter pitches forwards by variable thrust. Traditional multi-copters do not have control surfaces to change direction, thus simplifying design. Multi copters can move by these methods because their rotors produce downwards thrust to hover at the expense of speed and efficiency which are characteristic of the second fixed rotor category, the plane.

[0003] Traditionally, planes produce thrust in the horizontal axis and

use wings to generate lift. As a result, conventional planes require a runway or launching mechanism to launch. Once airborne, planes expend significantly less energy on staying airborne, whereas a multi rotor loses a constant stream of energy to maintain altitude. Planes navigate the airspace by using control surfaces to redirect airflow around their wings, thus changing the vehicle's course of direction.

[0004] Given a multi rotor's limitation to singularly produce vertical thrust, a vehicle of multi rotor design cannot efficiently maneuver underwater, where horizontal thrust vectoring is required for locomotion. A plane may be unsuitable, because its large wings can cause turbulence in rougher waters.

[0005] Traditional remotely operated underwater vehicles receive control inputs via a wired tether that can be caught on obstacles. Traditional ROVs rely on their large mass to keep from being moved by heavy currents, making them hard to transport.

SUMMARY

[0006] This summary is provided to introduce a selection of concepts in a simplified form that are further described below in the Detailed Description. This summary is not intended to identify key features or essential features of the claimed subject matter, nor is it intended to be used as an aid in determining the scope of the claimed subject matter.

[0007] Provided is an amphibious vertical takeoff and landing (VTOL) unmanned device. The amphibious VTOL unmanned device may include a modular and expandable waterproof body, a chassis, an outer body shell comprising one or more pieces, and a propulsion system selected from a coaxial propulsion system and a single-axis propulsion system. The propulsion system may comprise a plurality of motors and propellers associated with the plurality of motors. The propellers may be selected from clockwise propellers, counterclockwise propellers, and variable pitch propellers. The amphibious VTOL unmanned device may further include a propeller protection system, a surface skidding material platform, a landing system that conforms to a landing surface, one or more control surfaces selected from a group comprising: a rudder, an aileron, a flap, and elevator, a ballast selected from a permanently fixed ballast and a detachable ballast, an onboard air compressor, an onboard electrolysis system, at least one waterproof through-body wire or antenna feed-through, a single- or multiple-axis tilt-motor device, a tilt fuselage device, and a tilt wing device, a battery. A shape of the battery may conform to an interior profile of the modular and expandable waterproof body, a power distribution board one or more of the following: a flight controller, electronic speed controllers, a buzzer, an on screen display telemetry device, a video transmitter, and a radio control receiver. The board may act as the chassis of the system.

Furthermore, the amphibious VTOL unmanned device may include a Global Positioning System module, a lost model alert, a cooling device comprising at least one heat sink, fan, or duct, a detachable impact absorbing skin or shell, vision aiding and orientative lights, wherein the vision aiding and orientative lights include light emitting diodes, one or more hatches, quick connect payloads, a lap counter for racing, a flat or inclined launch platform or footing, one or more claws with at least one degree of freedom, an apparatus for externally attaching a cargo and internally housing the cargo, a charging station for multiple batteries, the charging station comprising a fireproof bunker, a partial vacuum device configured to perform cooling and increase buoyancy, a manually or automatically deployable parachute, and an onboard or ground station electricity generator comprising a plurality of solar cells, one or more wind turbines, and one or more hydroelectric generators.

[0008] In further exemplary embodiments, modules, subsystems, or devices can be adapted to perform the recited steps. Other features and exemplary embodiments are described below.

BRIEF DESCRIPTION OF DRAWINGS

[0009] Embodiments are illustrated by way of example and not limitation in the figures of the accompanying drawings, in which like references indicate similar elements and in which:

[0010] FIG. 1 illustrates an amphibious vertical takeoff and landing unmanned device, according to an example embodiment.

[0011] FIG. 2 illustrates a fixed pitch propeller and a variable pitch propeller, in accordance with some embodiments.

[0012] FIG. 3 illustrates a linkage for connection of servos or motors, in accordance with some embodiments.

[0013] FIG. 4 illustrates an amphibious vertical takeoff and landing unmanned device, in accordance with certain embodiments.

[0014] FIG. 5 shows an amphibious vertical takeoff and landing unmanned device, in accordance with some embodiments.

[0015] FIG. 6 shows an amphibious vertical takeoff and landing unmanned device, in accordance with some embodiments.

[0016] FIG. 7 shows modular electronics systems, in accordance with some embodiments.

[0017] FIG. 8 shows an amphibious vertical takeoff and landing unmanned device, in accordance with some embodiments.

[0018] FIG. 9 shows an amphibious vertical takeoff and landing unmanned device, in accordance with some embodiments.

[0019] FIG. 10 shows an amphibious vertical takeoff and landing unmanned device, in accordance with some embodiments.

[0020] FIG. 11 shows an amphibious vertical takeoff and landing unmanned device, in accordance with some embodiments.

[0021] FIG. 12 shows an amphibious vertical takeoff and landing unmanned device, in accordance with some embodiments.

[0022] FIG. 13 shows an amphibious vertical takeoff and landing unmanned device, in accordance with some embodiments.

[0023] FIG. 14 shows onboard cameras for providing a real-time first-person video and a real-time first-person view, in accordance with some embodiments.

[0024] FIG. 15 shows a headset configured to enable the real-time first-person video and a real-time first-person view, in accordance with some embodiments.

[0025] FIG. 16 shows an amphibious vertical takeoff and landing unmanned device, in accordance with some embodiments.

[0026] FIG. 17 shows an amphibious vertical takeoff and landing unmanned device, in accordance with some embodiments.

[0027] FIG. 18 shows an amphibious vertical takeoff and landing unmanned device, in accordance with some embodiments.

[0028] FIG. 19 shows an amphibious vertical takeoff and landing unmanned device, in accordance with some embodiments.

[0029] FIG. 20 shows an amphibious vertical takeoff and landing unmanned device, in accordance with some embodiments.

[0030] FIG. 21 shows an amphibious vertical takeoff and landing unmanned device, in accordance with some embodiments.

[0031] FIG. 22 shows an amphibious vertical takeoff and landing unmanned device, in accordance with some embodiments.

DETAILED DESCRIPTION

[0032] In the following description, numerous specific details are set forth in order to provide a thorough understanding of the presented concepts. The presented concepts may be practiced without some or all of these specific details. In other instances, well known process operations have not been described in detail so as to not unnecessarily obscure the described concepts. While some concepts will be described in conjunction with the specific embodiments, it will be understood that these embodiments are not intended to be limiting.

[0033] An amphibious vertical takeoff and landing (VTOL) unmanned vehicle to enable wireless aerial and underwater navigation using a tilt rotor mechanism is described herein. The vehicle may orient rotors perpendicular to a launching surface and take off vertically like a helicopter. The vehicle may further transition into a full forward flight mode by orienting the rotors into a fixed horizontal position. In another aerial setting, the vehicle may tilt the rotor in dynamic increments when the vehicle receives an input from an operator to move forwards or backwards. To move in the Y-axis, the speed of motors may remain constant, and the motors may tilt forwards or backwards as opposed to using methods involving differential thrust. The same tilt rotor locomotion techniques may be applied to the X-axis for efficient lateral motion. By tilting the motors of the vehicle to move, a body of the vehicle may stay at a predetermined level with respect to the ground or floor and all motors of the vehicle may reach a full throttle volume, thus allowing for faster speed and acceleration. The vehicle may still hover by tilting the rotors back into a vertical position.

[0034] The amphibious VTOL unmanned vehicle may load one of many downloaded flight profile parameters according to a given environmental

and mechanical state. The onboard flight controller may detect automatically or by manual input whether the vehicle is airborne or submerged. If the vehicle is airborne, the flight controller may detect whether the vehicle is in a hover mode, a full forward flight, or uses a dynamic tilting rotors function. Depending on the state of the vehicle, different flight and dive control parameters may be loaded. The sets of parameters are also referred to herein as flight profiles.

[0035] In the case of a failure of the vehicle when submerged, the vehicle may have a slight positive buoyancy so that the vehicle can float to the surface. The vehicle may include a gas powered or mechanically actuated ballast to add underwater stability and maneuverability while maintaining the overall light weight of the vehicle. The vehicle may use a counter-rotating torque influenced by differential motor speed and the tilt rotor functionality to navigate underwater with fixed pitch or variable pitch propellers. The amphibious VTOL unmanned vehicle may comprise a multi-rotor propulsion system. Propellers may be either directly attached to a motor shaft, or driven by a belt mechanism. The number of motors may be less than the number of propellers. The propellers may be fixed pitch propellers to reduce weight, or variable pitch propellers to optimize the vehicle for pressure changes. Furthermore, variable pitch propellers or collective pitch propellers may enable three-dimensional acrobatic maneuvers and sustained inverted flight. In the case of a tilt rotor VTOL vehicle, the rotors may be attached to the ends of a movable shaft to enable the tilt rotor functionality. In turn, the shaft may be actuated by a direct drive, a belt drive, or rigid links attached to a brushless motor or a geared motor. Access to the internal mechanisms of the vehicle may require at least one waterproof hatch. Mechanisms within the body of the vehicle may

include a tilt actuator of at least one tilt axis, and an integrated modular electronics system.

[0036] Referring now to the drawings, FIG. 1 illustrates an amphibious VTOL unmanned device, according to an example embodiment. The amphibious VTOL unmanned vehicle also referred herein to as the amphibious VTOL unmanned device may be used for photography and video capturing. The amphibious VTOL unmanned device is described herein with reference to post-recording media editing services.

[0037] As shown on FIG. 1 the amphibious VTOL unmanned device 100 may be single axis or coaxial rotor system and may be propelled by a direct drive, for example when propellers 102 are directly attached to a motor shaft, or by belts and pulleys, chains and sprockets, magnets, and/or rigid links, where the propellers 102 may be indirectly linked to the motor shaft. The motors may be powered by electricity or high pressure fluid, including gas.

[0038] The propellers 102 may be fixed pitch propellers or variable pitch propellers. FIG. 2 represents schematic diagrams 200 and 250 of a fixed pitch propeller 205 and a variable pitch propeller 255. The variable pitch propeller may be are actuated by servos, motors, pistons, or linear actuators which move a slider 260 axially. The servos or motors may be attached to the slider 260 directly, or by linkages. FIG. 3 shows a schematic diagram 300 of a linkage 305 for connection of the servos or motors to the slider. In further embodiments, the servos or motors may be attached to the slider 260 by frictionless magnet gears, conventional gears, chains, and/or pulleys.

[0039] Referring back to FIG. 1, a Y-axis tilt mechanism of the device 100 may require the rotors to be mounted on opposite ends of a shaft perpendicular to the center of the device 100. The shaft may be linked

directly or indirectly to a motor or servo which tilts the shaft, thus tilting the rotors attached to the shaft. The X-axis tilt mechanism may require the rotors to be mounted on opposite ends of a shaft perpendicular to the center of the device 100. The shaft may be linked directly or indirectly to a motor or servo that may move a slider axially, thus enabling the variable pitch of the propellers. The Y-axis tilt mechanism may also work by employing rotor pair separately, directly or motors or servos to tilt each singular rotor or coaxial indirectly. The X-axis tilt mechanism may also work by employing motors or servos to move each singular rotor slider or coaxial rotor slider pair separately, directly or indirectly. Y- and X-axis tilt movements may be combined by implementing a ball and socket joint for each rotor or coaxial rotor pair component. Moving the rotor systems and landing gear components in the Z-axis may involve raising the rotor arms higher than the body of the device 100, or lowering the body below the rotor arms. On case of a direct motor attachment, the direct motor attachment includes the embodiment when the motor or servo are aided by a supported extension shaft. The tilting mechanisms may utilize waterproof ball bearings at the point where the body meets the tilting arms.

[0040] The amphibious VTOL device 100 may comprise a ballast to enhance stability underwater while still able to stay light in the sky. The device 100 may utilize a gas ballast system, piston ballast system, vented ballast system, pressure ballast system, compressed air ballast system, and a recirculating compressed air ballast system. The device 100 may further include a static diving systems that may utilize a filler valve, a flood valve, a blow valve, a charge valve, a pressure vessel, a vent, a vent valve, or multipurpose valve. The static diving systems may utilize at least one air pump, a water pump, an air compressor, an electrolysis machine, a piston,

and/or a motor to increase or decrease the buoyancy of the device 100.

[0041] The device 100 may further include a camera stabilization device that may compensate for the wobble of the device 100 up along three axes by using separate servos to control camera pan, tilt, and roll. The servos or motors may be used for stabilization and manipulating camera direction as instructed by at least one operator. The camera positioning system may be capable of switching between positions below, above, and to the sides of the sides of the device 100 not limited to a single central axis. The device 100 may further include a photography and videography system that may utilize a mobile camera positioning system that moves the camera stabilization device or the lone camera and accessories between the top and bottom of the device 100. Camera positioning system may also include an extendable arm. The camera positioning system may move laterally, unrestricted by the central axis of the device 100.

[0042] The device 100 may further include a skid-resistant under-body material component, which may be useful in such cases as low altitude multirotor racing where the vehicle is susceptible to contact the ground for a short period of time. The under-body material component may be replaced when damaged.

[0043] FIG. 4 shows a schematic diagram 400 of another example embodiment of the device 100. The device 100 may include control surfaces 405. The control surfaces 405 may include an elevator, a rudder, a sail, v-tail surfaces, ailerons, tailplanes, and foreplanes to allow for sharp cornering. The device 100 may include one or many wings 410 to generate lift without needing much thrust compensation for body inclination.

[0044] FIG. 5 shows a device 500 being another example embodiment of the device 100. The device 500 is a multirotor vehicle having rotors 510, 520,

530, and 540.

[0045] FIG. 6 shows a device 600 being another example embodiment of the device 100. The device 600 is a multirotor vehicle having rotors 610, 620, 630, 640, 650, and 660. The device 600 may have a two-axis tilting mechanism 670 configured to tilt each of the rotors 610, 620, 630, 640, 650, and 660.

[0046] FIG. 7 shows schematic views of modular electronics systems 700 and 750, in accordance to some embodiments. The modular electronics systems 700 and 750 may be used in the device 100.

[0047] The device 100 may further include a tilt fuselage device, a tilt wing device, and a tilt rotor device. Additionally, the device 100 may include a battery. The shape of the battery may conform to the interior shape of the device 100 to maximize the use of the internal volume of the device 100. The device 100 may include through-wall wire and antenna feedthroughs which may be sealed to prevent water leakage. The two-way telemetry transmitter may send GPS coordinates back to the operator in the case of the device 100 is lost. Referring back to FIG. 1, the device 100 may include a cooling system 104. The cooling system 104 may be selected from ventilation cooling units, heat sink cooling units, liquid cooling units, and fan cooling units. The device 100 may further include a detachable skin or shell for impact absorption and scratch protection. Furthermore, device 100 may include lights for clear camera vision or lights for signaling, such as for the reception of a command, warning messages, and/or status reports. In case the device 100 is a multirotor vehicle, the device 100 may utilize a lap counter that may function by communication between a sensor and an onboard transponder. The multirotor vehicle may utilize a quick connect payload system which may operate by a click in place, snap in place, screw

in place, or slide in place mechanism. The device 100 may comprise at least one claw for grasping instruments used to observe or capture specimens, handle specimens, and transportation. The device 100 may comprise an inclined launching platform. In example embodiments, device 100 may be launched at an obtuse angle to the ground for expedient takeoff. The multirotor vehicle may embody a charging station that may recharge multiple batteries at the same time, and a sustainable green electricity generator onboard or at the ground station. Additionally, the device 100 may be configured to be launched from a body of a user, such as from hands. The device 100 may be controlled by the user using a mobile and wearable device, such as a smartwatch or a phone, via motion gestures, buttons, and a touch screen of the a mobile and wearable device. In particular, the mobile and wearable device may enable to user to submit a trip request. The trip request may be routed to the device 100 to initiate a peer-to-peer pick up service or a cargo transportation.

[0048] The device 100 may further include a deployable parachute in case of the failure of the device 100 when airborne.

[0049] The multirotor vehicle may include devices for internally housing or externally attaching a payload of goods. As an example of an externally housed payload, the device 100 may comprise a motorized or pressurized latch mechanism attached onto the payload or payload housing for an impermanent time period. As an example of an internally housed payload, the device 100 may comprise an empty internal storage area that may be accessed by a motorized or pressurized hatch. The payload may be left at the destination by ways involving the device 100 to descend to an altitude below 15 feet. The payload may also be left at the destination by a free fall parachute or a guided parachute.

[0050] The device 100 may further include an integrated modular electronics system that may include a central flight control component (including sensors and control parameters), electronic speed controllers, a power distribution harness or board, a telemetry module, a radio control receiver, and a video transmitter. The power distribution board may serve as the platform upon which the other electronics components may be linked to each other and the power distribution board by numerous pins, soldering connections, and a minimal amount of wires. The various components may be arranged to compact within a single board that can be serviced with hardware updates. Individual electronics components may be substituted if broken or outdated, simply by desoldering a one part solder connection or detaching a two part pin connection or plug connection.

[0051] The plurality of hatches of the internal components of the device 100 serve a double purpose: the first purpose is an internal access and system modification, the second purpose is to allow subsequent hardware upgrades. For example, the transmitter or receiver antennas, which come in different sizes per frequency, must have a specifically sized exit hole per desired antenna upgrade. The original antennas exit may be substituted with another hatch having different hole sizes. The upgraded antennas may exit soundly.

[0052] In another example embodiment, increased battery capacity may be desired for endurance flights. The swappable hatches may accommodate a battery within a waterproof shell, and may be substituted with the hatch to fasten the described dual purpose battery hatch-module.

[0053] The device 100 may further include a radio control and video systems that may run on different very high frequency (30-300 MHz), ultra-high frequency (300 MHz – 3 GHz), or super high frequency (3-30 GHz) channels.

The very high and ultra-high frequency categories offer the best obstacle penetration and may be used with high gain (10-30 dBic) antennas and high power (800 mw – 10 w) transmitter/receiver sets for wireless underwater communication and long range aerial communication.

[0054] The device 100 may include onboard or separate media editing systems for virtual reality views, interactive video, or stitched photos. If the onboard media editing systems are used, a transformed footage may be downlinked to the operator in real time with low latency. When low latency footage cannot be achieved, the onboard media editing systems may transform the media before or shortly after landing. If onboard media editing systems are not implemented, post-capture media editing methods may be applied.

[0055] FIG. 8 represents diagrams 820, 830, 840, 860, and 880 that show amphibious VTOL unmanned devices, according to example embodiments. As represented on the diagrams 820, 830, 840, 860, and 880, an amphibious VTOL unmanned device 800 may be configured as a flying car and may include a modular and expandable waterproof body 802. A chassis 804 may be attached to the body 802. Furthermore, the device 800 may include an outer body shell 806. The outer body shell 806 may include one or more pieces 812. The device 800 may further include a door 808, 810 connected to the modular and expandable waterproof body. The door 808, 810 may be selected from a gull wing door and a falcon wing door.

[0056] In further example embodiments, the device 800 may include a propulsion system. The propulsion system may be selected from a coaxial propulsion system and a single-axis propulsion system. The propulsion system may comprise a plurality of motors. Each of the motors may be associated with a plurality of propellers 814, 816, 818, 822, 824, and 828

associated with the plurality of motors. The propellers 814, 816, 818, 822, 824, and 828 may be selected from clockwise propellers, counterclockwise propellers, variable pitch propellers. The propellers 814 and 818 may be mounted on lateral sides of the device 800, as shown on diagrams 820, 830, 840, 860, and 880. Furthermore, several propellers, such as the propellers 822 and 824, may be located in a rear portion of the device 800, as shown on diagrams 830 and 840. In further embodiments, only one propeller may be located in the rear portion of the device 800, such as the propeller 816. Additionally, the propeller 828 may be located in a front portion of the device 800. Diagrams 820 and 860 show propellers 814, 816, 818 in a first mode when the device 800 is operable to perform a vertical takeoff. Diagram 860 shows propeller 828 in a first mode when the device 800 is operable to perform the vertical takeoff. Diagram 830 shows propellers 824, 822 in the first mode when the device 800 is operable to perform the vertical takeoff. Diagrams 840 and 880 show propellers 814, 818 in a second mode when the device 800 is operable to perform flying. Diagram 880 shows propellers 816, 828 in the second mode when the device 800 is operable to perform flying. Diagram 840 shows propellers 822, 824 in the second mode when the device 800 is operable to perform flying.

[0057] In an example embodiment, the plurality of motors and propellers may include ducted propellers, such as multi-blade ducted fans, fixed pitch propellers, controllable pitch propellers, two-position propellers, full feathering propellers, and tilted propellers. In a further example embodiment, the plurality of motors and propellers may include two motors and propellers, three motors and propellers, four motors and propellers, five motors and propellers, and six motors and propellers. In an example embodiment, at least one of the plurality of motors and propellers is located

on a foldable wing, the foldable wing folding in a ground mode and unfolding in a flight mode.

[0058] In a further embodiment, the motor may be a solar turbine powered master impeller motor disposed centrally in the device 800. The solar turbine powered master impeller motor may include an electric-drive impeller. The electric-drive impeller may be contained in a compression chamber and may have an axis of rotation oriented perpendicularly to an axis of the device 800. The solar turbine powered master impeller motor may be powered by a solar film. The solar film may be integrated on an upper surface of the device, a lower surface of the device, and the at least one wing of the device. The solar turbine powered master impeller motor may be further powered by the electrical power storage device.

[0059] The at least one wing of the device 800 may include a left forward swept wing and a right forward swept wing. The left forward swept wing and the right forward swept wing may be mounted on the chassis.

[0060] The propellers may further include a first brushless ducted fan and a second brushless ducted fan integrated left and right of the chassis. The first brushless ducted fan and the second brushless ducted fan may be powered by the solar film. Furthermore, the first brushless ducted fan and the second brushless ducted fan may be associated with a brushless electric motor operable to spin the electric-drive impeller to provide at least one air accelerator ring with compressed forced air thrust. The solar film also may recharge capacitors for the propulsion of the device 800 with persistent flight endurance targeted for 7-30 days.

[0061] FIG. 9 represents diagrams 905, 920, 930, 940, 950, 960, 970, and 980 showing a further example embodiment, according to which the device 800 may have a propeller protection system 910. The propeller protection

system 910 may include a wing tip folding mechanism. Diagrams 905 and 920 show the propeller protection system 910 in an unfolded mode. Diagram 950 shows a front view of the propeller protection system 910 in the unfolded mode. Diagram 980 shows a rear view of the propeller protection system 910 in the unfolded mode. Diagram 960 shows a right side view of the propeller protection system 910 in the unfolded mode. Diagram 970 shows a left side view of the propeller protection system 910 in the unfolded mode. Diagram 930 shows the propeller protection system 910 in a semi-folded mode. Arrow 915 show a direction of folding of the propeller protection system 910. Diagram 940 show the propeller protection system 910 in a folded mode. Arrow 925 shows a direction of folding of the propeller protection system 910 to transform the propeller protection system 910 from the semi-folded state to the folded state.

[0062] The propeller protection system 910 may fully or partially surrounds any type of propellers, such as self-tightening fixed pitch propellers and variable pitch propellers.

[0063] In further example embodiments, the device 800 may include a surface skidding material platform and a landing system. The lending system may conforms to a landing surface. Additionally, the device 800 may include one or more control surfaces selected from a group comprising: a rudder, an aileron, a flap, and elevator. The device 800 may be operable to perform an automatic landing and an automatic takeoff.

[0064] In an example embodiment, the device 800 further includes a ballast. The ballast may be a permanently fixed ballast or a detachable ballast. Additionally, the device 800 may include an onboard air compressor, an onboard electrolysis system, at least one waterproof through-body wire or antenna feed-through.

[0065] In a further example embodiment, the device 800 may include a single- or multiple-axis tilt-motor device. FIG. 10 shows diagrams 1010, 1020, 1030, and 1040, on which the device 800 includes a tilt-motor device 1025, a tilt wing device 1015, and a tilt fuselage device (not shown). The device 800 may further include at least one tilt rotor device embedded into the door 808, 810. The tilt-motor device 1025 may tilt the propellers 1035 and the tilt wing device 1015 tilt the propellers 1045. Arrows 1055 show a direction of rotation of the tilt-motor device 1025. Diagrams 1010, 1020, and 1030 show propellers 1035, 1045 located in a first mode when the device 800 may perform a vertical takeoff. Diagram 1040 shows propellers 1035, 1045 in a second mode when the device 800 may perform flying.

[0066] In an example embodiment, the device 800 may further include a battery. A shape of the battery may conform to an interior profile of the modular and expandable waterproof body. The battery may be a lithium ion polymer (Li-Po or Li-Poly) battery that conforms to the interior profile, and includes a built-in battery charge indicator.

[0067] Additionally, the device 800 may include a power distribution board. The power distribution board may be associated with one or more of the following devices: a flight controller, electronic speed controllers, a buzzer, an onscreen display telemetry device, a video transmitter, a radio control receiver, and so forth. In some embodiments, the power distribution board may act as the chassis of the device 800.

[0068] In a further example embodiment, the device 800 may include a Global Positioning System (GPS) module, a lost model alert, a cooling device, such as a heat sink, a fan, or a duct, a detachable impact absorbing skin or shell, vision aiding and orientative lights, such as light emitting diodes, one or more hatches, quick connect payloads, a lap counter for

racing, a flat or inclined launch platform or footing, one or more claws with at least one degree of freedom, an apparatus for externally attaching a cargo and internally housing the cargo, a charging station for multiple batteries. Therefore, the device 800 may serve as a vehicle for carrying people or cargos. In further example embodiments, the device 800 may be configured as one of the following: an autonomous vehicle, a multi-blade ducted fan roadable electric aircraft, an uncrewed vehicle, a driverless car, a self-driving car, an unmanned aerial vehicle, a drone, a robotic car, a commercial goods and passenger carrying vehicle, a private self-drive vehicle, a family vehicle, a military vehicle, and a law enforcement vehicle.

[0069] The autonomous vehicle may be configured to sense environmental conditions, navigate without human input, and perform autopiloting. The sensing of the environmental conditions may be performed via one or more of the following: a radar, a lidar, the GPS module, and a computer vision module. The processor of the device 800 may be operable to interpret sensory information to identify navigation paths, obstacles, and signage. The autonomous vehicle may be also operable to update maps based on sensory input to keep track of a position when conditions change or when uncharted environments are entered.

[0070] The multi-blade ducted fan roadable electric car may be propelled by one or more electric motors using electrical energy stored in the electrical power storage device.

[0071] The charging station of the device 800 may include a fireproof bunker. The device 800 may include a partial vacuum device configured to perform cooling and increase buoyancy. Furthermore, the device 800 may include an onboard or ground station electricity generator that may comprise a plurality of solar cells, one or more wind turbines, and one or

more hydroelectric generators.

[0072] Additionally, the device 800 may include a parachute. FIG. 11 shows diagrams 1110 and 1120, which represent the device 800 having a parachute 1130. The parachute 1130 may be a manually deployable parachute or an automatically deployable parachute.

[0073] In a further example embodiment, the device 800 may include one or more modules attached to the modular and expandable waterproof body. The one or more modules may include a waterproof battery module, a turbine, a solar panel, a claw, a camera stabilization device, a thermal inspection device, an environmental sample processor, a seismometer, a spectrometer, an osmosampler, a night vision device, a hollow waterproof module for upgrades, third party gear, and hardware upgrades.

[0074] In a further example embodiment, the battery may be partially or completely modular. The electronic speed controllers may be configured to detach from an electronic speed controller stack. The video transmitter and the radio control receiver may be removable for upgrade. The onscreen display telemetry device may be removable for upgrade. The plurality of motors may be removable for upgrade. The flight controller may be configured to detach from the power distribution board.

[0075] In a further example embodiment, the modular and expandable waterproof body may have a back portion and a front portion. The back portion and the front portion may show colors for ease of user orientation.

[0076] In a further example embodiment, the propulsion system may be powered by a high pressure gas and direct current brushless motors. The propellers may be attached directly to a motor shaft associated with one or more of the plurality of motors or may be mechanically linked to one or more of the plurality of motors through a series of pulley belts.

[0077] In a further example embodiment, the device 800 may include a landing gear system configured to retract, absorb shock, conform to the landing surface or a launching surface, and house or carry antennas.

[0078] In further example embodiments, the variable pitch propellers may be actuated by servoactuators or one or more of the plurality of motors. Additionally, the propellers may be foldable or removable. FIG. 12 shows diagrams 1210, 1220, 1230, 1240, which represent the device 800 that has foldable propellers 1205. The foldable propellers 1205 may be attached to arms 1215. The arms 1215 may be permanently attached, removable, or foldable. Arrows 1225 show a direction of rotation of the arms 1215.

[0079] Additionally, a retractable wing 1245 may be connected to the device 800. Arrows 1235 show a direction of rotation of the retractable wing 1245.

[0080] FIG. 13 shows diagrams 1310, 1320, 1330 that show the device 800 having the retractable wing 1245 in an extended mode. Arrow 1305 shows a direction of movement of the retractable wing 1245 from a folded mode into the extended mode. Additionally, the foldable propellers 1205 may be tilted. Diagrams 1310 and 1320 show the foldable propellers 1205 in an initial position and diagram 1330 shows the foldable propellers 1205 in a tilted position.

[0081] In further example embodiments, the motors of the device 800 may include a brushless motor, a brushed motor, an outrunner motor, and an inrunner motor. The motors may spin with 1800-2400 revolutions per volt to be paired with the propellers having 4-8 inch diameter and 3-6 inches of pitch per rotation, or 80-700 revolutions per volt to be paired with larger propellers with larger pitch, such as 10-18 inch diameter propellers with 4-12 inches of pitch per rotation.

[0082] In further example embodiments, the device 800 may include a plurality of rotors that may be operable to tilt on a three axis. The motors may be attached to at least one arm. A mating tilt mechanism to the at least one arm may be actuated by one or more motors or a servomotor drive train. The servomotor drive train and the one or more motors may be connected to the at least one arm. The motors may be non-aligned on at least one axis.

[0083] In the device 800, a position of the pulley belts may be set by guide rails, grooved guide pulleys, or cylindrical guide pulleys, and tightened with a tensioner clamp. The pulley belt may be configured to connect pulleys on the arms with a servo pulley.

[0084] The present disclosure also refers to a video capture, realtime broadcast, and video downlink system for an amphibious VTOL unmanned device. The system may include a camera stabilization device, a camera movement device configured move the camera, and one or more onboard cameras for providing a real-time first-person video and a real-time first-person view and normal footage video recording and 360-degree panoramic video recording used for virtual reality views and interactive video. FIG. 14 shows a kit 1400 of one or more onboard cameras for providing a real-time first-person video and a real-time first-person view.

[0085] The system may further include a video transmitter and receiver device configured to perform high definition low latency real time video downlink. The video transmitter and receiver device may be a high power, high gain, and ultra-high frequency device. The system may further include a one way and two way telemetry device, a live broadcast device, and a headset configured to enable the real-time first-person video and a real-time first-person view. FIG. 15 shows a headset 1500 configured to enable the

real-time first-person video and a real-time first-person view.

[0086] In further example embodiments, the system may further include a public database for viewing flight or dive activity, software for licensing videos with a watermarked preview, software for autonomously extracting usable footage and compiling the usable footage into a video montage synced to music, onboard or separate software for stitching photos to form a modified photo, and onboard or separate software for stitching videos to form virtual reality views or interactive video.

[0087] In an example embodiment, the one or more onboard cameras may be configured to adjust one or more of the following parameters: zoom, shutter speed, aperture, ISO, focal length, depth of field, exposure compensation, white balance, video or photo frame size and orientation, camera resolution and frame rates; switch cameras used for live streaming, digitally stabilize video; capture panoramic photos, capture thermal measurements, edit color correction, produce night vision images and video, produce flash. The cameras may have one or more lens filters. The cameras may be configured to be mounted on surfaces of the amphibious VTOL unmanned device on a motorized camera stabilization device or a vibration free mount. The motorized camera stabilization device may be actuated by a brushless motor, a brushed motor, a coreless motor, or a geared motor.

[0088] Additionally, the cameras for capturing panoramic views may be mounted on a multi-camera spherical rig. The multi-camera spherical rig may be mounted onto a camera stabilization device or a fixed mounting device. A content captured by the cameras may be combined to create a panoramic video. The headset 1500 shown on FIG. 15 may be used by a user to view the panoramic video. A viewing angle may be controlled by one or more of the following: head tracking, pressing arrow keys, dragging

a screen of the headset, and clicking and dragging a compass icon. Additionally, the headset 1500 may include a video receiver, such as an internally housed video receiver, an externally mounted video receiver, and a separate video receiver, and an integrated camera to enable a user to see surroundings.

[0089] Furthermore, the video transmitter and receiver device of the system may be configured to control one or more of the following: an omnidirectional or directional antenna, a low pass filter, a ninety degree adapter, head tracking and eye tracking to manipulate movement of the camera stabilization device for video capture or live playback, antenna tracking on the ground station or onboard.

[0090] In an example embodiment, the one way and two way telemetry device may be configured to control an on screen display to inform a user of battery voltage, current draw, signal strength, minutes flown, minutes left on battery, joystick display, flight and dive mode and profile, amperage draw per unit of time, GPS latitude and longitude coordinates, an operator position relative to a position of the amphibious VTOL unmanned device, number of GPS satellites, and artificial horizon displayed on a wearable device, such as a tablet, a phone, and the headset. Additionally, the one way and two way telemetry device may be configured to provide a follow-me mode when the amphibious VTOL unmanned device uses the wearable device as a virtual tether to track the user via the camera when the user moves. In an example embodiment, a first person may carry a ground station and may be followed by the amphibious VTOL unmanned device, and a second person may carry a controller and may be ready to regain manual control at any time. The follow-mw mode may require a GPS enabled wearable device. The follow-me mode may make it possible

for the user to have a flying car follow the user as the user moves by using a telemetry radio and a ground station. The follow-me mode may be implemented by using the wearable device as the ground station.

[0091] In an example embodiment, the live broadcast device may include an onboard High Definition Multimedia Input port operable to transmit standard definition, high definition, virtual reality, and interactive video to one or more bystanders. The interactive video may be broadcasted on at least one of the following: a screen, a projector, a split screen, a switch screen, and the headset. The live broadcast device may further comprise an aerial, ground, and marine vehicle for filming the amphibious VTOL unmanned device.

[0092] The present disclosure also refers to a collision avoidance, flight stabilization, and multi-rotor control system for an amphibious VTOL unmanned device. The system may be configured as a flying car and may include a flight and dive control device configured to perform one or more of the following: auto level control, altitude hold, return to an operator automatically, return to the operator by manual input, operating auto-recognition camera, monitoring a circular path around a pilot, and controlling autopilot, supporting dynamic and fixed tilting arms. The system may further include one or more sensors and one or more cameras configured to control one or more of the following: obstacle avoidance, terrain and Geographical Information System mapping, close proximity flight including terrain tracing, and crash resistant indoor navigation. The system may additionally include an autonomous takeoff device, an auto-fly or dive to a destination with at least one manually or automatically generated flight plan, an auto-fly or dive to the destination by tracking

monuments, a direction lock, a dual operator control device, a transmitter and receiver control device. The transmitter and receiver control device may include one or more antennas. The antennas may be high gain antennas. The transmitter and receiver control device may further include a lock mechanism operated by one or more of the following: numerical passwords, word passwords, fingerprint recognition, face recognition, eye recognition, and a physical key. The system may further include at least one electronic speed controllers (ESC) selected from a standalone ESC and an ESC integrated into a power distribution board of the amphibious VTOL unmanned device. The ESC may be operable to program a motor spin direction without reconnecting wires by the user via spinning a motor in a predetermined direction, and record an input.

[0093] In an example embodiment, the device 800 may further include a first rotor operable to rotate about a first axis and tilt about a second axis between a helicopter mode and an aeroplane mode. The first rotor may include a shaft operable to rotate about the first axis and tilt about the second axis between the helicopter mode and the aeroplane mode. The first axis may be transversal to a longitudinal direction of the device 800 in the helicopter mode and may be substantially parallel to the longitudinal direction in the aeroplane mode. The device 800 may further include a second rotor operatively connected to the shaft of the first rotor. The device 800 may further include an electrical power storage device and an electrical machine. The electrical machine may include a stator electrically connected to the electrical power storage device. The electrical machine may act as an electric motor for driving rotation of the first rotor by using the electrical power storage device. The electrical machine may further act as an electrical power generator for re-charging the electrical power storage device by

causing the rotation of the second rotor under action of a wind current.

[0094] The one or more sensors are selected from a group of the following sensors: individual sensors, stereo sensors, ultrasonic sensors, infrared sensors, multispectral sensors, optical flow sensors, and volatile organic compound sensors. The one or more sensors may be provided for intelligent positioning, collision avoidance, media capturing, surveillance, and monitoring.

[0095] In some embodiments, the system may include an open source code and an open source software development kit. The system may further include a processor. The processor may include a flight controller. The flight controller may include an external micro controller or an internal micro controller, and a barometer, an accelerometer, a gyroscope, a GPS, and a magnetometer.

[0096] The flight and dive control device may be configured to perform stable transitions between a hover mode, a full forward flight mode, and an underwater mode, enable or disable a GPS, record flight parameters, allow inverted flight, aerial and aquatic rolls and flips, and stabilize proportional, integral, and derivative gains above water and below water. Additionally, the flight and dive control device may be configured to restrict the amphibious VTOL unmanned device to fly-safe locations, receive and enact force shut-off commands associated with a manufacturer, receive software updates from the manufacturer, activate the amphibious VTOL unmanned device after a user inputs an arming action or an arming sequence, Furthermore, the flight and dive control device may be configured to provide thrust compensation for body inclination by acting as a body pitch suppressor to maintain an altitude in forward flight and compensate yaw and roll mixing when rotors of the amphibious VTOL unmanned device tilt.

[0097] The system may further include a radio control device operable to control an omnidirectional or directional antenna, antenna tracking on a ground station or onboard the amphibious VTOL unmanned device tilt, a low pass filter, ninety degree adapter, a detachable module for RC communication on a channel having a frequency selected from 72MHz, 75MHz, 433MHz, and 1.2/1.3GHz, adjustable dual rates and exponential values, at least one dial or joystick for controlling the movement of a camera stabilization device, one or more foot pedals, a slider, a potentiometer, and a switch to transition between a flight profile and a dive profile. The radio control device may be controlled by stick inputs and motion gestures. In further embodiments, the radio control device may be further operable to perform automatic obstacle avoidance and automatic maneuvering around an obstacle when the amphibious VTOL unmanned device performs a flight in a predetermined direction. For example, when the user wants the amphibious VTOL unmanned device to fly forwards through obstacles, such as trees, the user needs only to signal the amphibious VTOL unmanned device to go forwards, and the amphibious VTOL unmanned device may autonomously dodge through the obstacles. Additionally, the radio control device may be operable to turn on a swarm follow-me function by instructing a plurality of amphibious VTOL unmanned devices to follow a single subject and capture a plurality of views of the subject, where different amphibious VTOL unmanned devices capture different views of the same subject.

In further example embodiments, the system may further include a navigation device. The navigation device may be configured to enable autonomous flying at low altitude and avoiding obstacles, evaluate and select landing sites in an unmapped terrain, and land safely using a

computerized self-generated approach path. Furthermore, the system may be configured to enable a pilot aid to help a pilot to avoid obstacles, such as power lines, and select landing sites in unimproved areas, such as emergency scenes, during operating in low-light or low-visibility conditions. Furthermore, the system may be configured to detect and maneuver around a man lift during flying, detect high-tension wires over a desert terrain, and enable operation in a near earth obstacle rich environment, The system may also include a navigation sensor configured to map an unknown area where obstructions limited landing sites and identify level landing sites with approach paths that are accessible for evacuating a simulated casualty. The navigation sensor may be configured to build three-dimensional maps of a ground and find obstacles in a path, detect four-inch-high pallets, chain link fences, vegetation, people and objects that block a landing site, enable continuously identifying potential landing sites and develop landing approaches and abort paths. Additionally, the navigation sensor may be configured to select a safe landing site being closest to a given set of coordinates. The navigation sensor may include an inertial sensor and a laser scanner configured to look forward and down. The navigation sensor may be paired with mapping and obstacle avoidance software. The mapping and obstacle avoidance software may be operable to keep a running rank of the landing sites, approaches and abort paths to enable responding to unexpected circumstances. Additionally, the amphibious VTOL unmanned device may include a light detection and ranging lidar and an ultrasonic radar sensor.

[0098] Further example embodiments of an amphibious VTOL unmanned device 800 configured as a flying car are represented on FIGs. 16-21. More specifically, FIG. 16 shows diagrams 1610, 1620, 1630, 1640, which represent

the device 800 that has a rotatable propulsion system 1605. The rotatable propulsion system 1605 may include a retractable wing 1615, arms 1625, and propellers 1635. Diagram 1610 shows the rotatable propulsion system 1605 in a folded position. Diagram 1620 shows the rotatable propulsion system 1605 in a folded rotated position. Diagram 1630 shows the rotatable propulsion system 1605 in an unfolded position. Diagram 1640 shows the rotatable propulsion system 1605 in an unfolded rotated position.

[0099] FIG. 17 shows diagrams 1710, 1720, which represent the device 800 having a retractable wing 1705 and rotatable propellers 1715. Diagram 1710 shows the rotatable propellers 1715 in a first mode when the device 800 may perform a vertical takeoff. Diagram 1720 shows the rotatable propellers 1715 in a second mode when the device 800 may perform horizontal flying. The rotatable propellers 1715 may be rotated using rotatable arms 1725.

[00100] FIG. 18 shows diagrams 1810, 1820, 1830, 1840, which represent the device 800 having a rotatable wing 1805 and rotatable propellers 1815. Diagram 1810 shows a folded position of the rotatable wing 1805. Diagram 1820 shows an unfolded position of the rotatable wing 1805. Arrows 1825 show a direction of rotation of the rotatable wing 1805. Diagram 1830 shows the rotatable propellers 1815 in a first mode when the device 800 may perform a vertical takeoff. Diagram 1840 shows the rotatable propellers 1815 in a second mode when the device 800 may perform horizontal flying. The rotatable propellers 1715 may be rotated using rotatable arms 1835.

[00101] FIG. 19 shows diagrams 1910, 1920, which represent a multi-axis propulsion system 1905 of the device 800. Diagram 1910 shows rotatable propellers 1915 in a first mode when the device 800 may perform a vertical takeoff. Diagram 1920 shows the rotatable propellers 1915 in a second mode when the device 800 may perform horizontal flying. The rotatable

propellers 1915 may be rotated using rotatable arms 1925.

[00102] FIG. 20 shows diagrams 2010, 2020, which represent the device 800 being a radio controlled toy. The device 800 may be operated using a radio communication channel. The device 800 may have rotatable propellers 2005. The device 800 in a form of the toy may be used for capturing first person views, recording video, performing photography, and so forth.

[00103] FIG. 21 shows diagrams 2110, 2120, 2130, 2140, and 2150, which represent the device 800 having extruded wheels 2105 and rotatable propellers 2115. Diagrams 2110 and 2120 show a folded position of the rotatable propellers 2115. Diagrams 2130, 2140, 2150 show an unfolded position of the rotatable propellers 2115. Arrows 2125 show a direction of unfolding of the rotatable propellers 2115. Diagram 2130 shows the rotatable propellers 2115 in a first mode when the device 800 may perform flying. Diagrams 2130, 2140, and 2150 show the rotatable propellers 2115 in a second mode when the device 800 may perform a vertical takeoff. The rotatable propellers 2115 may be rotated from the first mode to the second mode by rotating the rotatable propellers 2115 in a direction shown by arrows 2135.

[00104] FIG. 22 shows diagrams 2210 and 2220, which represent the device 800 that has two wings 2205 and 2210. Each of the wings 2205 and 2210 may have a propeller 2215. Diagram 2210 shows a folded position of the propellers 2215. Diagram 2220 shows an unfolded position the propellers 2215.

[00105] Thus, various an amphibious VTOL unmanned devices have been described. Although embodiments have been described with reference to specific example embodiments, it will be evident that various modifications and changes may be made to these embodiments without

departing from the broader spirit and scope of the system and method described herein. Accordingly, the specification and drawings are to be regarded in an illustrative rather than a restrictive sense.

CLAIMS

What is claimed is:

1. An amphibious vertical takeoff and landing (VTOL) unmanned device comprising:

a modular and expandable waterproof body;

a chassis;

an outer body shell comprising one or more pieces;

a propulsion system selected from a coaxial propulsion system and a single-axis propulsion system, the propulsion system comprises a plurality of motors and propellers associated with the plurality of motors, wherein the propellers are selected from clockwise propellers, counterclockwise propellers, and variable pitch propellers, wherein the propellers include at least a multi-blade ducted fan;

a propeller protection system;

at least one wing;

a surface skidding material platform;

a landing system that conforms to a landing surface;

one or more control surfaces selected from a group comprising: a rudder, an aileron, a flap, and elevator;

a ballast selected from a permanently fixed ballast and a detachable ballast;

an onboard air compressor;

an onboard electrolysis system;

at least one waterproof through-body wire or antenna feed-through;

a single- or multiple-axis tilt-motor device;

a tilt fuselage device;

a tilt wing device;

a door connected to the modular and expandable waterproof body, wherein the door is selected from a gull wing door and a falcon wing door;

at least one tilt rotor device embedded into the door;

a battery, wherein a shape of the battery conforms to an interior profile of the modular and expandable waterproof body;

a power distribution board comprising one or more of the following: a flight controller, electronic speed controllers, a buzzer, an on screen display telemetry device, a video transmitter, and a radio control receiver, wherein the power distribution board acts as the chassis;

a first rotor operable to rotate about a first axis and tilt about a second axis between a helicopter mode and an aeroplane mode, wherein the first rotor comprises a shaft operable to rotate about the first axis and tilt about the second axis between the helicopter mode and the aeroplane mode; the first axis being transversal to a longitudinal direction of the amphibious VTOL unmanned device in the helicopter mode and being substantially parallel to the longitudinal direction in the aeroplane mode;

second rotor operatively connected to the shaft of the first rotor;

an electrical power storage device;

an electrical machine comprising a stator electrically connected to the electrical power storage device, wherein the electrical machine acts as an electric motor for driving rotation of the first rotor by using the electrical power storage device, and wherein the electrical machine acts as an electrical power generator for re-charging the electrical power storage device by causing the rotation of the second rotor under action of a wind current;

a Global Positioning System (GPS) module;

a lost model alert;

a cooling device comprising at least one heat sink, fan, or duct;

a detachable impact absorbing skin or shell;

vision aiding and orientative lights, wherein the vision aiding and orientative lights include light emitting diodes;

one or more hatches;

quick connect payloads;

a lap counter for racing;

a flat or inclined launch platform or footing;

one or more claws with at least one degree of freedom;

an apparatus for externally attaching a cargo and internally housing the cargo;

a charging station for multiple batteries, the charging station comprising a fireproof bunker;

a partial vacuum device configured to perform cooling and increase buoyancy;

a manually or automatically deployable parachute;

an onboard or ground station electricity generator comprising a plurality of solar cells, one or more wind turbines, and one or more hydroelectric generators;

a 3D or 4D printed parts;

a carbon fiber hybrid solar cells;

a light detection and ranging lidar; and

an ultrasonic radar sensor;

wherein at least one motor of the plurality of motors includes a solar turbine powered master impeller motor disposed centrally in the device,

solar turbine powered master impeller motor comprising an electric-drive impeller contained in a compression chamber and having an axis of rotation oriented perpendicularly to an axis of the device, the solar turbine powered master impeller motor being powered by a solar film, the solar film being integrated on an upper surface of the device, a lower surface of the device, and the at least one wing of the device, and the solar turbine powered master impeller motor being powered by the electrical power storage device;

wherein the at least one wing includes a left forward swept wing and a right forward swept wing, the left forward swept wing and the right forward swept wing being mounted on the chassis,

wherein the propellers further include a first brushless ducted fan and a second brushless ducted fan integrated left and right of the chassis, the first brushless ducted fan and the second brushless ducted fan being powered by the solar film, the first brushless ducted fan and the second brushless ducted fan being associated with a brushless electric motor operable to spin the electric-drive impeller to provide at least one air accelerator ring with compressed forced air thrust.

2. The device of claim 1, wherein the plurality of motors and propellers includes ducted propellers, fixed pitch propellers, controllable pitch propellers, two-position propellers, full feathering propellers, and tilted propellers.

3. The device of claim 1, wherein the plurality of motors and propellers includes two motors and propellers, three motors and propellers, four

motors and propellers, five motors and propellers, and six motors and propellers.

4. The device of claim 1, wherein at least one of the plurality of motors and propellers is located on a foldable wing, the foldable wing folding in a ground mode and unfolding in a flight mode.

5. The device of claim 1, further comprising one or more modules attached to the modular and expandable waterproof body, the one or more modules are selected from a group comprising: a waterproof battery module, a turbine, a solar panel, a claw, a camera stabilization device, a thermal inspection device, an environmental sample processor, a seismometer, a spectrometer, an osmosampler, a night vision device, a hollow waterproof module for upgrades, third party gear, and hardware upgrades.

6. The device of claim 1, wherein the battery is partially or completely modular, and wherein the electronic speed controllers is configured to detach from an electronic speed controller stack, the video transmitter and the radio control receiver are removable for upgrade, the on screen display telemetry device is removable for upgrade, the plurality of motors are removable for upgrade, and the flight controller is configured to detach from the power distribution board, wherein the battery is a lithium ion polymer battery that conforms to the interior profile, and includes a built-in battery charge indicator.

7. The device of claim 1, wherein the modular and expandable waterproof body has a back portion and a front portion, wherein the back portion and the front portion show colors for ease of user orientation, wherein the device is configured to be launched from a body of a user, wherein the device is controlled by the user using a mobile and wearable device via motion gestures, buttons, and a touch screen, wherein the device is operable to perform an automatic landing and an automatic takeoff, wherein the device is configured in a form of one of the following: a people-carrying vehicle, a cargo-carrying vehicle, a radio controlled toy, an autonomous vehicle, a multi-blade ducted fan roadable electric aircraft, an uncrewed vehicle, a driverless car, a self-driving car, an unmanned aerial vehicle, a drone, a robotic car, a commercial goods and passenger carrying vehicle, a private self-drive vehicle, a family vehicle, a military vehicle, and a law enforcement vehicle;

wherein the autonomous vehicle is configured to sense environmental conditions, navigate without human input, and perform autopiloting; wherein the sensing is performed via one or more of the following: a radar, a lidar, the GPS module, and a computer vision module; wherein the processor is operable to interpret sensory information to identify navigation paths, obstacles and signage; wherein the autonomous vehicle is operable to update maps based on sensory input to keep track of a position when conditions change or when uncharted environments are entered;

wherein the multi-blade ducted fan roadable electric car is propelled by one or more electric motors using electrical energy stored in the electrical power storage device; and

wherein the mobile and wearable device enables to user to submit a trip request, the trip request being routed to the device to initiate a peer-to-peer pick up service or a cargo transportation.

8. The device of claim 1, wherein the propulsion system is powered by:

a high pressure gas; and

direct current brushless motors, wherein the propellers are attached directly to a motor shaft associated with one or more of the plurality of motors or are mechanically linked to one or more of the plurality of motors through a series of pulley belts.

9. The device of claim 8, wherein a position of the pulley belts is set by guide rails, grooved guide pulleys, and cylindrical guide pulleys, and tightened with a tensioner clamp, wherein the pulley belts are configured to connect pulleys on arms with a servo pulley.

10. The device of claim 1, wherein the propeller protection system fully or partially surrounds the propellers, wherein the propellers are selected from self-tightening fixed pitch propellers and variable pitch propellers.

11. The device of claim 1, further comprising a landing gear system configured to:

retract;

absorb shock;

conform to the landing surface or a launching surface; and

house or carry antennas.

12. The device of claim 6, wherein the variable pitch propellers are actuated by servoactuators or one or more of the plurality of motors.

13. The device of claim 1, wherein the propellers are foldable or removable, the propellers being attached to arms, and wherein the arms are permanently attached, removable, or foldable.

14. The device of claim 1, wherein the plurality of motors include one or more of a brushless motor, a brushed motor, an outrunner motor, and an inrunner motor, wherein the plurality of motors spin with 1800-2400 revolutions per volt to be paired with the propellers having 4-8 inch diameter and 3-6 inches of pitch per rotation, or spin with 80-700 revolutions per volt to be paired with the propellers having 10-18 inch diameter with 4-12 inches of pitch per rotation, and wherein the plurality of motors are non-aligned on at least one axis.

15. The device of claim 1, further comprising a plurality of rotors, the plurality of rotors being operable to tilt on a three axis, the one or more of the plurality of motors is attached to at least one arm, and a mating tilt mechanism to the at least one arm is actuated by one or more motors or a servomotor drive train, wherein the servomotor drive train and the one or more motors are connected to the at least one arm.

16. A video capture, realtime broadcast, and video downlink system for an amphibious VTOL unmanned device, the system comprising:

a camera stabilization device;

a camera movement device configured move the camera;

one or more onboard cameras for providing a real-time first-person video and a real-time first-person view and normal footage video recording and 360-degree panoramic video recording used for virtual reality views and interactive video;

a video transmitter and receiver device configured to perform high definition low latency real time video downlink, wherein the video transmitter and receiver device is a high power, high gain, and ultra-high frequency device;

a one way and two way telemetry device;

a live broadcast device;

a headset configured to enable the real-time first-person video and a real-time first-person view;

a public database for viewing flight or dive activity;

software for licensing videos with a watermarked preview;

software for autonomously extracting usable footage and compiling the usable footage into a video montage synced to music;

onboard or separate software for stitching photos to form a modified photo; and

onboard or separate software for stitching videos to form virtual reality views or interactive video.

17. The system of claim 16, wherein the one or more onboard cameras are configured to:

adjust one or more of the following parameters: zoom, shutter speed, aperture, ISO, focal length, depth of field, exposure compensation, white balance, video or photo frame size and orientation, camera resolution and frame rates; switch cameras used for live streaming, digitally stabilize video;

capture panoramic photos, capture thermal measurements, edit color correction, produce night vision images and video, produce flash; and

wherein the one or more cameras have one or more lens filters;

wherein the one or more cameras are configured to be mounted on surfaces of the amphibious VTOL unmanned device on a motorized camera stabilization device or a vibration free mount, the motorized camera stabilization device being actuated by a brushless motor, a brushed motor, a coreless motor, or a geared motor.

18. The system of claim 16, wherein the one or more cameras for capturing panoramic views are mounted on a multi-camera spherical rig, wherein the multi-camera spherical rig is mounted onto a camera stabilization device or a fixed mounting device, wherein a content captured by the one or more cameras are combined to create a panoramic video, wherein the headset is used by a user to view the panoramic video, wherein a viewing angle is controlled by one or more of the following: head tracking, pressing arrow keys, dragging a screen of the headset, and clicking and dragging a compass icon.

19. The system of claim 16, wherein the video transmitter and receiver device is configured to control one or more of the following: an omnidirectional or directional antenna, a low pass filter, a ninety degree adapter, head tracking and eye tracking to manipulate movement of the camera stabilization device for video capture or live playback, antenna tracking on a ground station or onboard.

20. The system of claim 16, wherein the one way and two way telemetry device is configured to control an on screen display to inform a user of battery voltage, current draw, signal strength, minutes flown, minutes left on battery, joystick display, flight and dive mode and profile, amperage draw per unit of time, GPS latitude and longitude coordinates, an operator position relative to a position of the amphibious VTOL unmanned device, number of GPS satellites, and artificial horizon displayed on a wearable device, the wearable device being selected from a tablet, a phone, and the headset, wherein the one way and two way telemetry device is configured to provide a follow-me mode when the amphibious VTOL unmanned device uses the wearable device as a virtual tether to track the user via the camera when the user moves.

21. The system of claim 16, wherein the live broadcast device comprises an onboard High Definition Multimedia Input port operable to transmit standard definition, high definition, virtual reality, and interactive video to one or more bystanders, wherein the interactive video is broadcasted on at least one of the following: a screen, a projector, a split screen, a switch screen, and the headset, wherein the live broadcast device further comprises an aerial, ground, and marine vehicle for filming the amphibious VTOL unmanned device.

22. The system of claim 16, wherein the headset comprises a video receiver selected from an internally housed video receiver, an externally mounted video receiver, and a separate video receiver, and an integrated camera to enable a user to see surroundings.

23. A collision avoidance, flight stabilization, and multi-rotor control system for an amphibious VTOL unmanned device, the system comprising:

a flight and dive control device configured to perform one or more of the following: auto level control, altitude hold, return to an operator automatically, return to the operator by manual input, operating auto-recognition camera, monitoring a circular path around a pilot, and controlling autopilot, supporting dynamic and fixed tilting arms;

one or more sensors and one or more cameras configured to control one or more of the following: obstacle avoidance, terrain and Geographical Information System mapping, close proximity flight including terrain tracing, and crash resistant indoor navigation;

an autonomous takeoff device;

an auto-fly or dive to a destination with at least one manually or automatically generated flight plan;

an auto-fly or dive to the destination by tracking monuments;

a direction lock;

dual operator control;

a transmitter and receiver control device comprising one or more antennas, the one or more antennas including high gain antennas, ;

the transmitter and receiver control device further comprising a lock mechanism operated by one or more of the following: numerical passwords, word passwords, fingerprint recognition, face recognition, eye recognition, and a physical key; and

at least one electronic speed controllers (ESC) selected from a standalone ESC and an ESC integrated into a power distribution board of the amphibious VTOL unmanned device.

24. The system of claim 23, further comprising:

a processor, wherein the processor includes a flight controller, wherein the flight controller is selected from an external micro controller or an internal micro controller; and

a barometer;

an accelerometer; a gyroscope;

a GPS; and

a magnetometer.

25. The system of claim 23, wherein the flight and dive control device is configured to:

perform stable transitions between a hover mode, a full forward flight mode, and an underwater mode;

enable or disable a GPS;

record flight parameters;

allow inverted flight, aerial and aquatic rolls and flips;

stabilize proportional, integral, and derivative gains above water and below water;

restrict the amphibious VTOL unmanned device to fly-safe locations;

receive and enact force shut-off commands associated with a manufacturer;

receive software updates from the manufacturer;

activate the amphibious VTOL unmanned device after a user inputs an arming action or an arming sequence;

provide thrust compensation for body inclination by acting as a body pitch suppressor to maintain an altitude in forward flight; and

compensate yaw and roll mixing when rotors of the amphibious VTOL unmanned device tilt.

26. The system of claim 23, further comprising a radio control device operable to control one or more of the following: an omnidirectional or directional antenna, antenna tracking on a ground station or onboard the amphibious VTOL unmanned device tilt, a low pass filter, ninety degree adapter, a detachable module for RC communication on a channel having a frequency selected from 72MHz, 75MHz, 433MHz, and 1.2 GHz and 1.3GHz, adjustable dual rates and exponential values, at least one dial or joystick for controlling movement of a camera stabilization device, one or more foot pedals, a slider, a potentiometer, and a switch to transition between a flight profile and a dive profile, and wherein the radio control device is further operable to perform automatic obstacle avoidance and automatic maneuvering around an obstacle when the amphibious VTOL unmanned device performs a flight in a predetermined direction, wherein the radio control device is operable to instruct a plurality of amphibious VTOL unmanned device to follow a single subject and capture a plurality of views of the subject, wherein the radio control device is controlled by stick inputs and motion gestures.

27. The system of claim 23, further comprising:

a navigation device configured to:

enable autonomous flying at low altitude and avoiding obstacles;

evaluate and select landing sites in an unmapped terrain;

land safely using a computerized self-generated approach path;

enable a pilot aid to help a pilot to avoid obstacles and select landing sites in unimproved areas during operating in low-light or low-visibility conditions;

detect and maneuver around a man lift during flying;

detect high-tension wires over a desert terrain; and

enable operation in a near earth obstacle rich environment; and a navigation sensor configured to:

map an unknown area where obstructions limited landing sites;

identify level landing sites with approach paths that are accessible for evacuating a simulated casualty;

build three-dimensional maps of a ground and find obstacles in a path;

detect four-inch-high pallets, chain link fences, vegetation, people and objects that block a landing site;

enable continuously identifying potential landing sites and develop landing approaches and abort paths;

select a safe landing site being closest to a given set of coordinates;

wherein the navigation sensor includes an inertial sensor and a laser scanner configured to look forward and down,

wherein the navigation sensor is paired with mapping and obstacle avoidance software, the mapping and obstacle avoidance software being operable to keep a running rank of the landing sites,

approaches and abort paths to enable responding to unexpected circumstances.

28. The system of claim 23, wherein the ESC are further operable to program a motor spin direction without reconnecting wires by a user via spinning a motor in a predetermined direction, and record an input.

29. The system of claim 23, wherein the system includes an open source code and an open source software development kit.

30. The system of claim 23, wherein the one or more sensors are selected from a group comprising: individual sensors, stereo sensors, ultrasonic sensors, infrared sensors, multispectral sensors, optical flow sensors, and volatile organic compound sensors, wherein the one or more sensors are provided for intelligent positioning, collision avoidance, media capturing, surveillance, and monitoring.

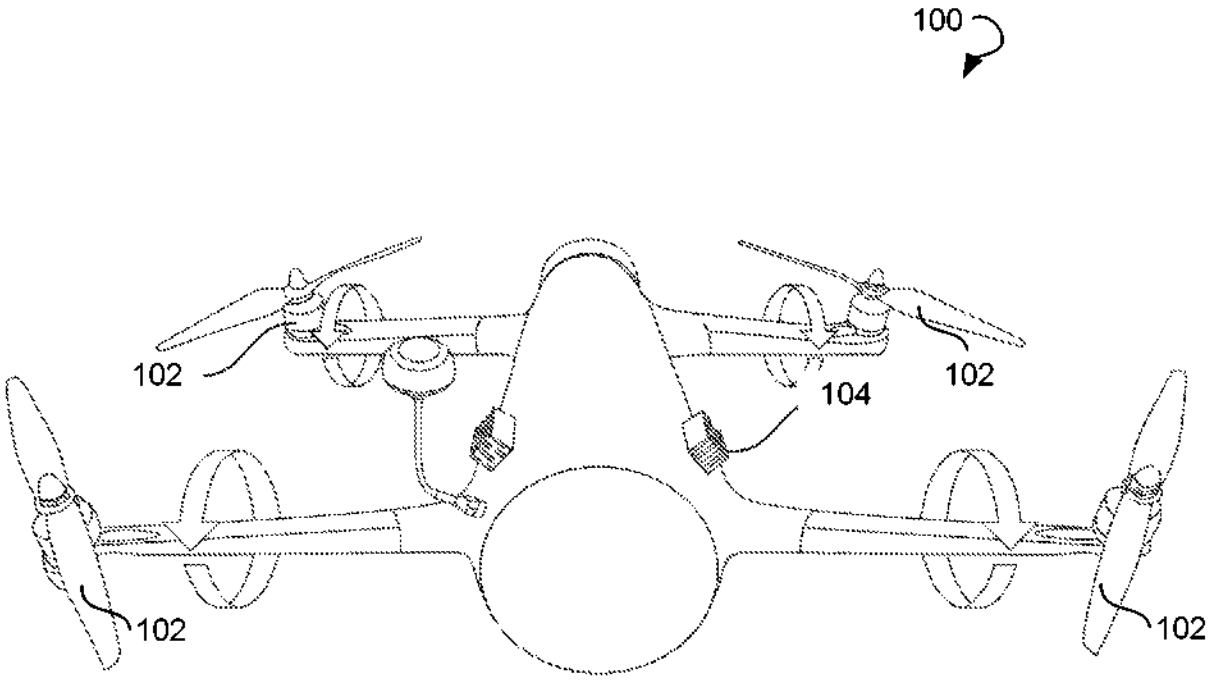

FIG. 1

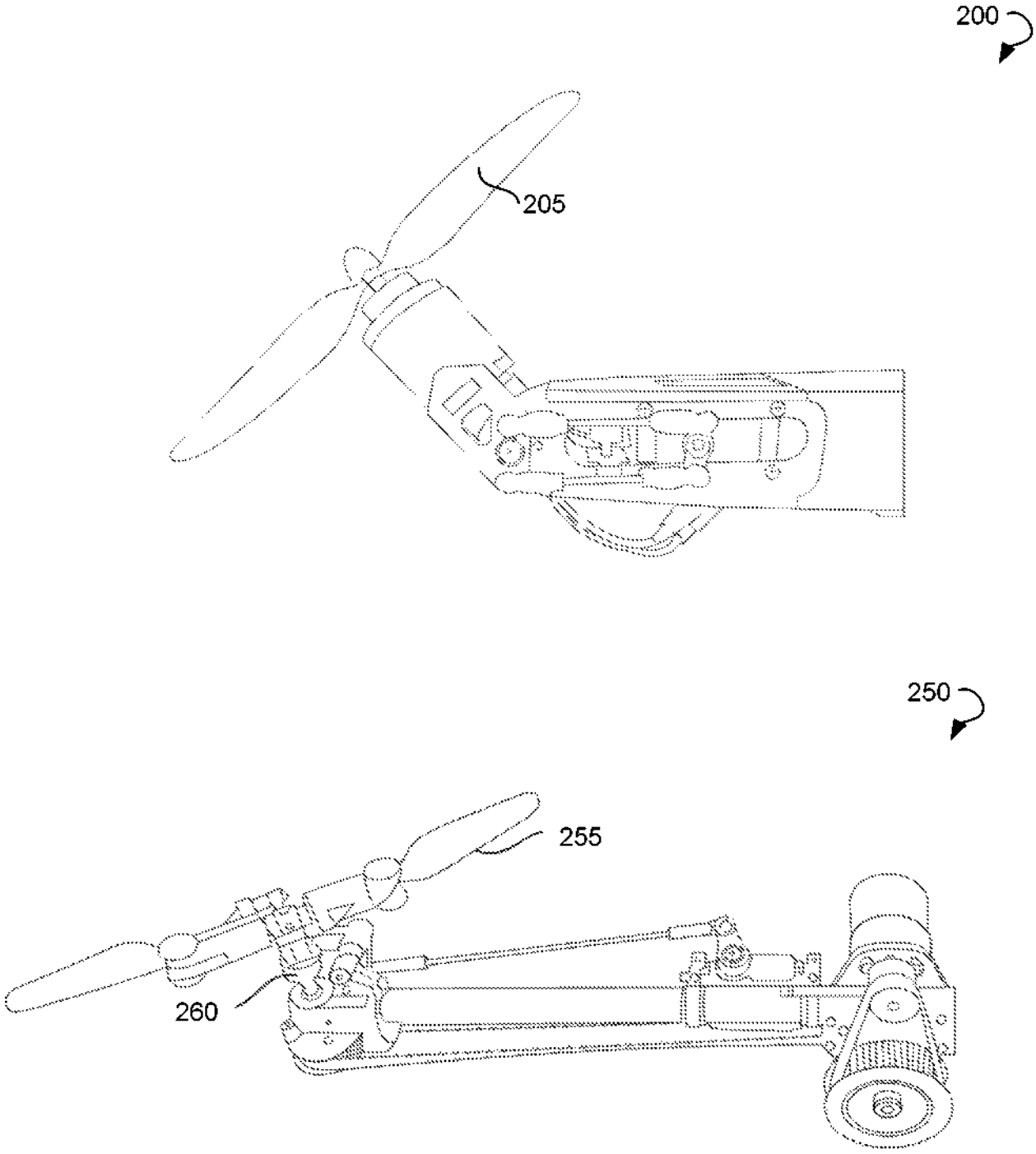

FIG. 2

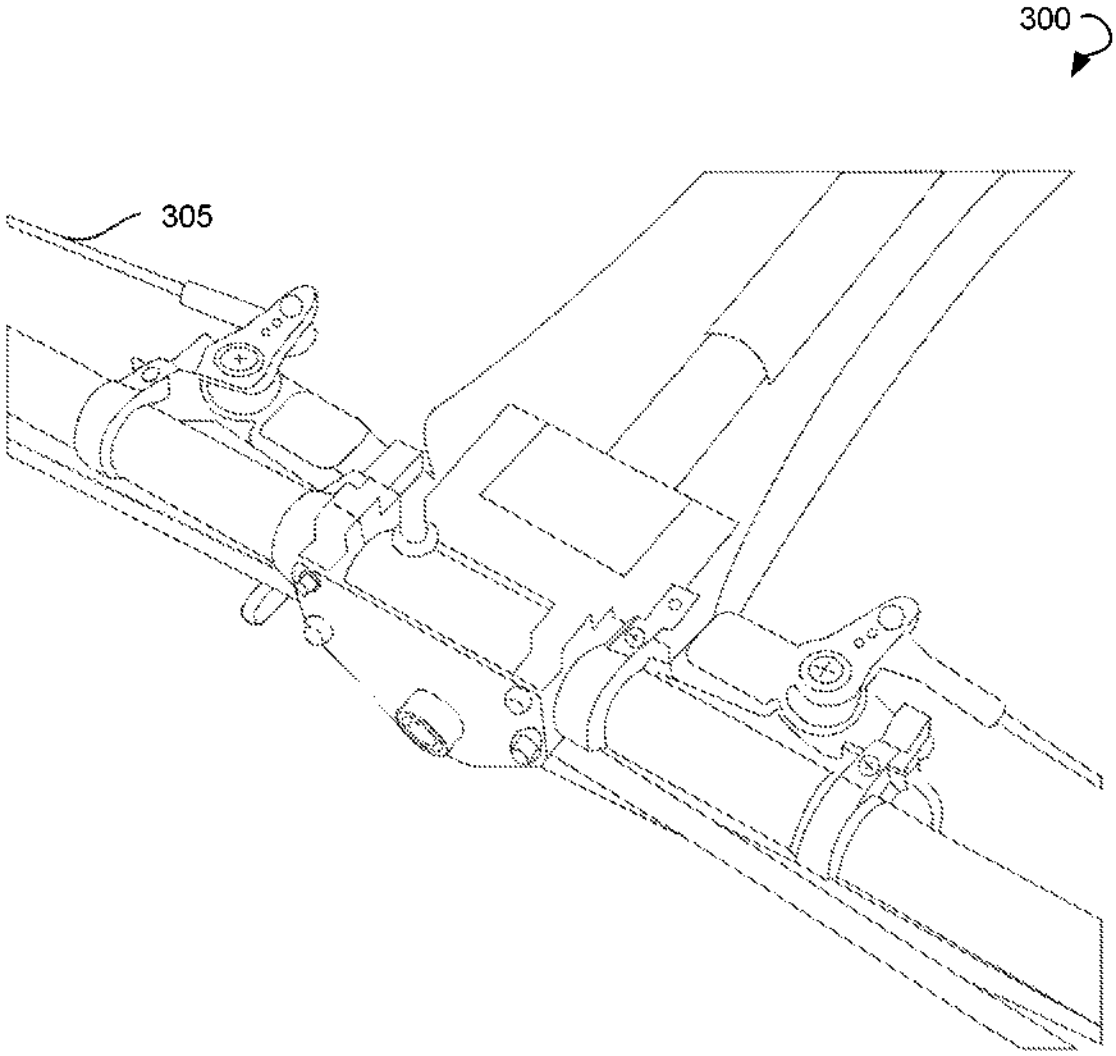

FIG. 3

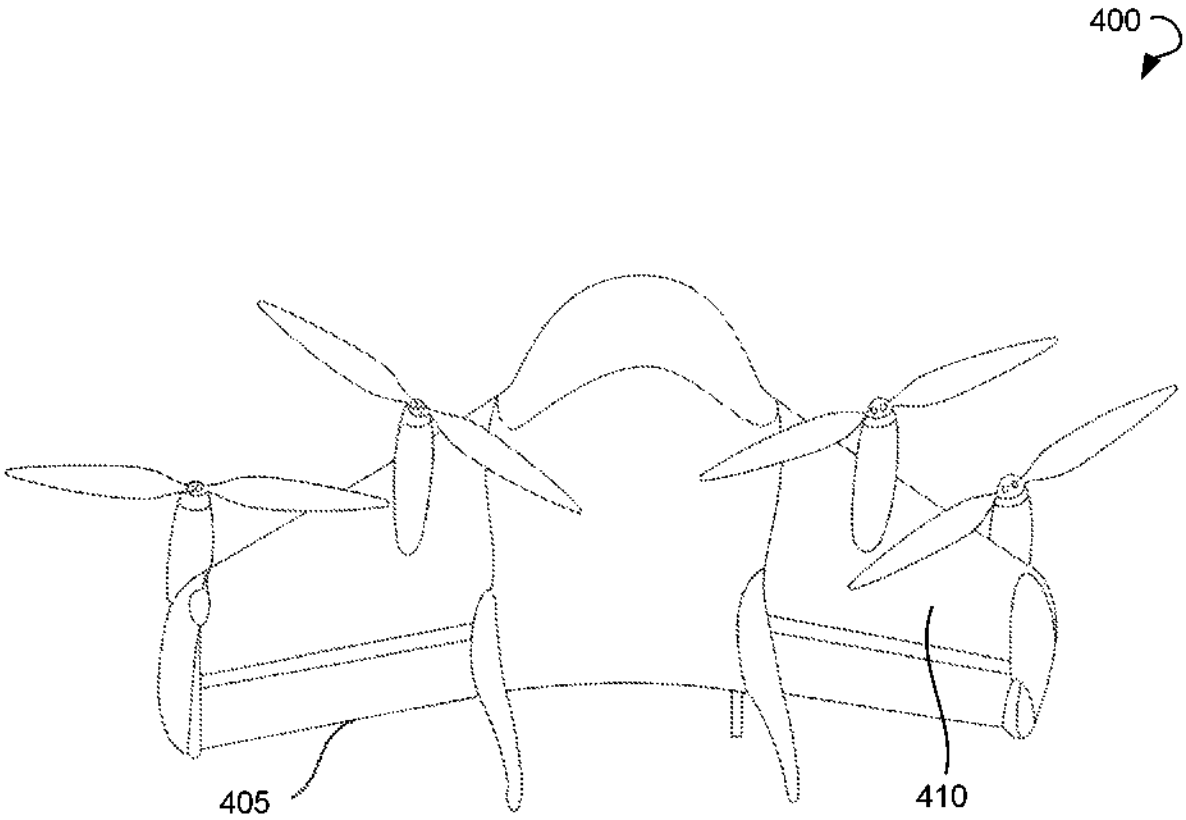

FIG. 4

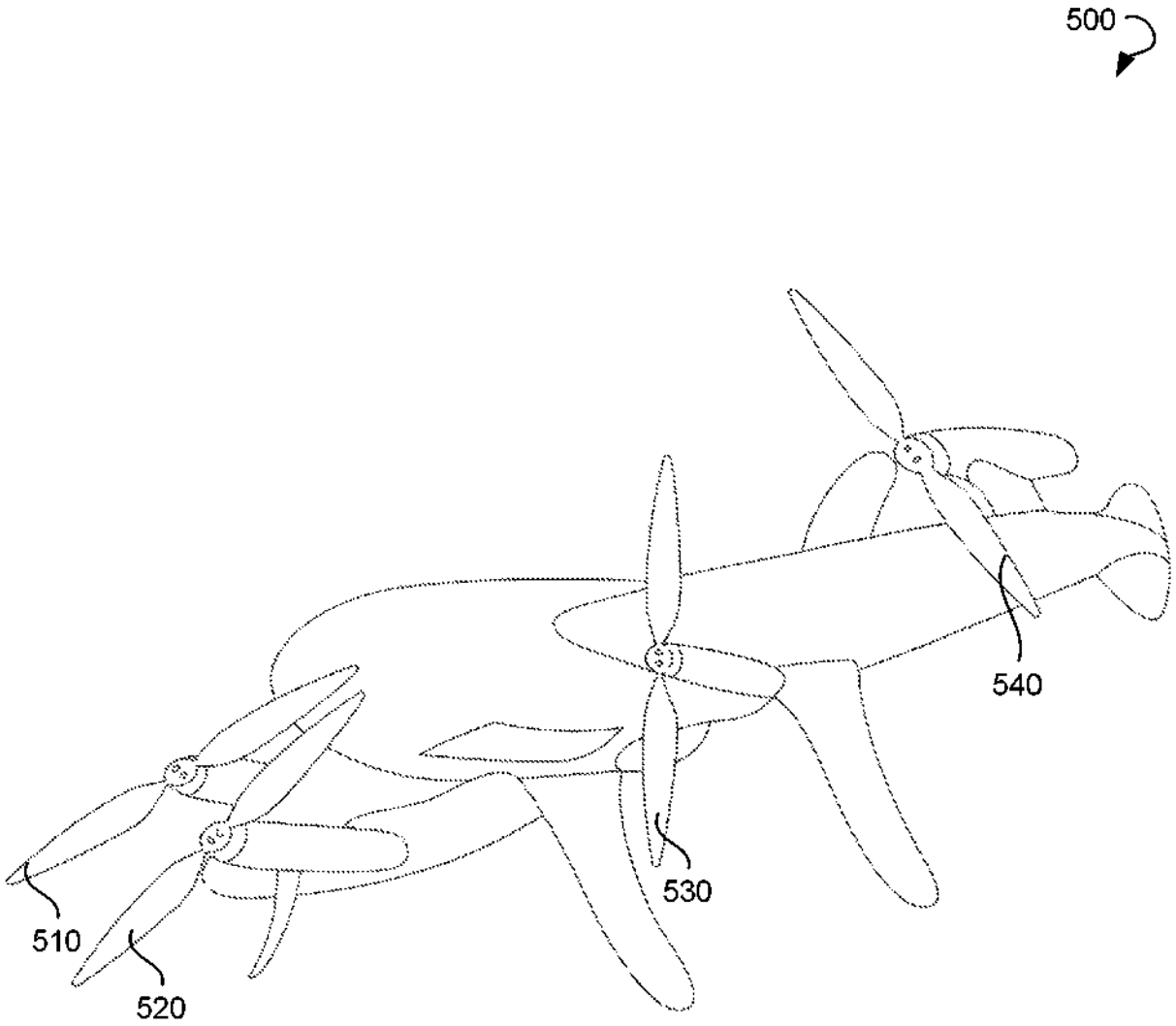

FIG. 5

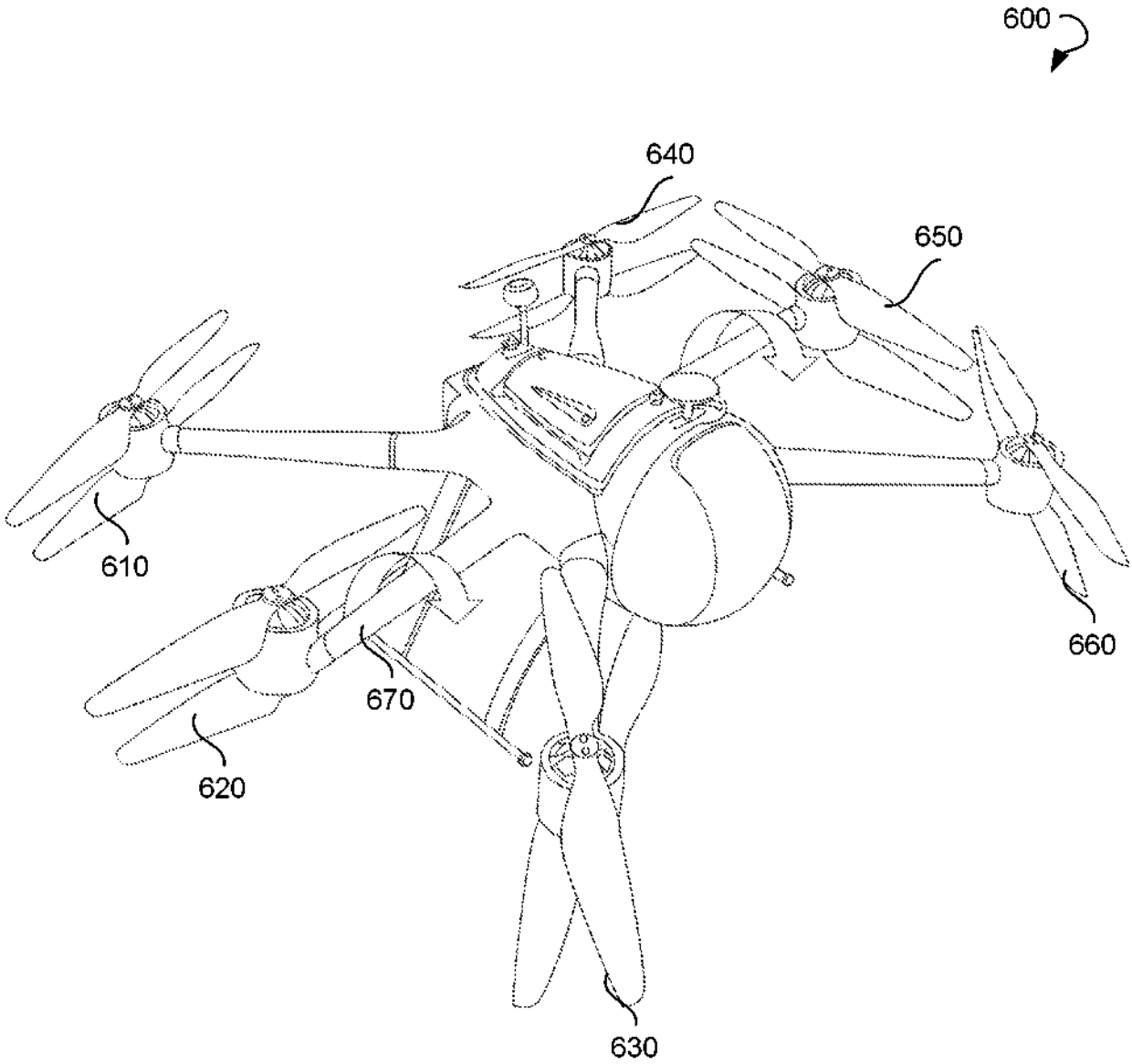

FIG. 6

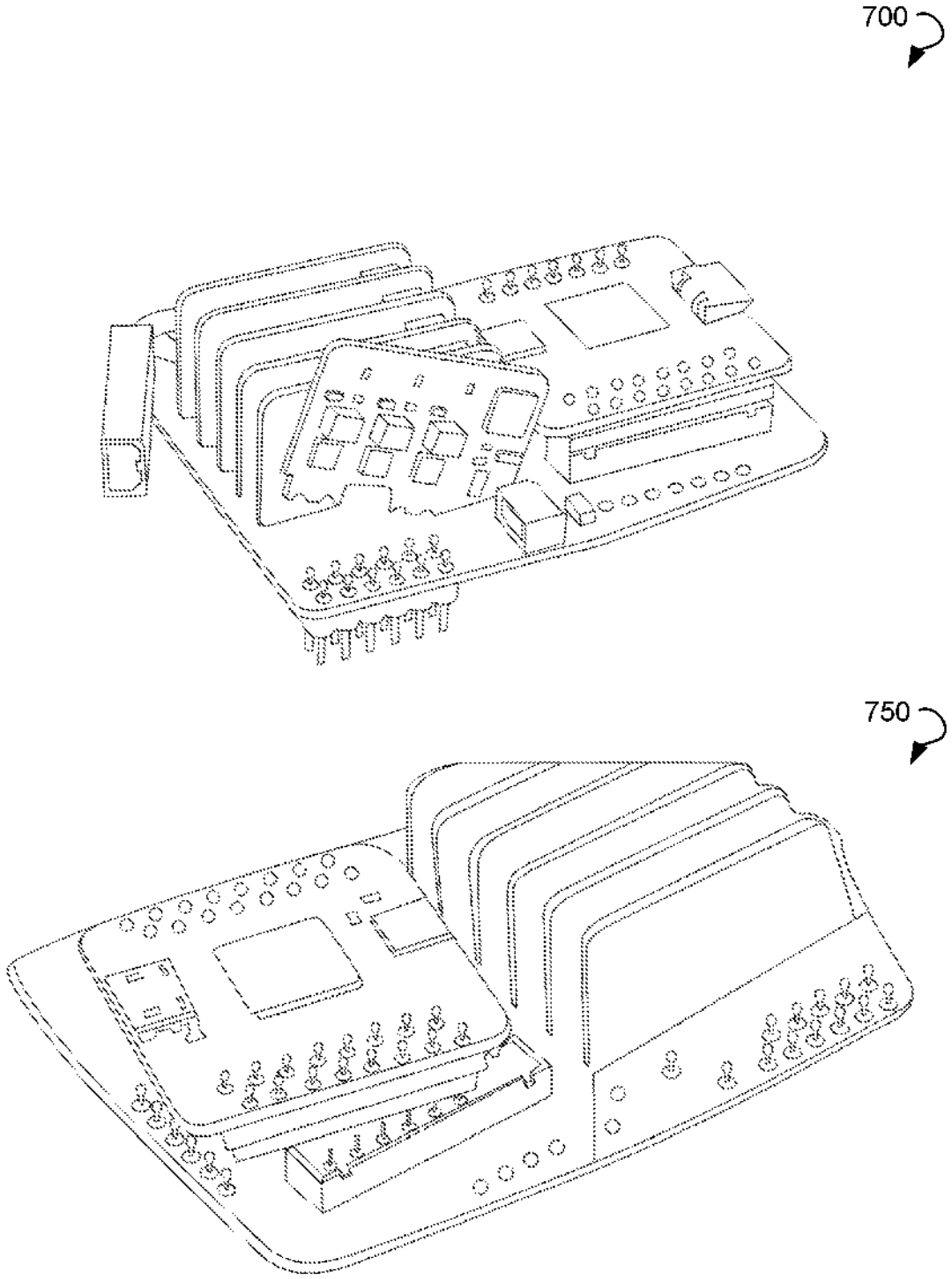

FIG. 7

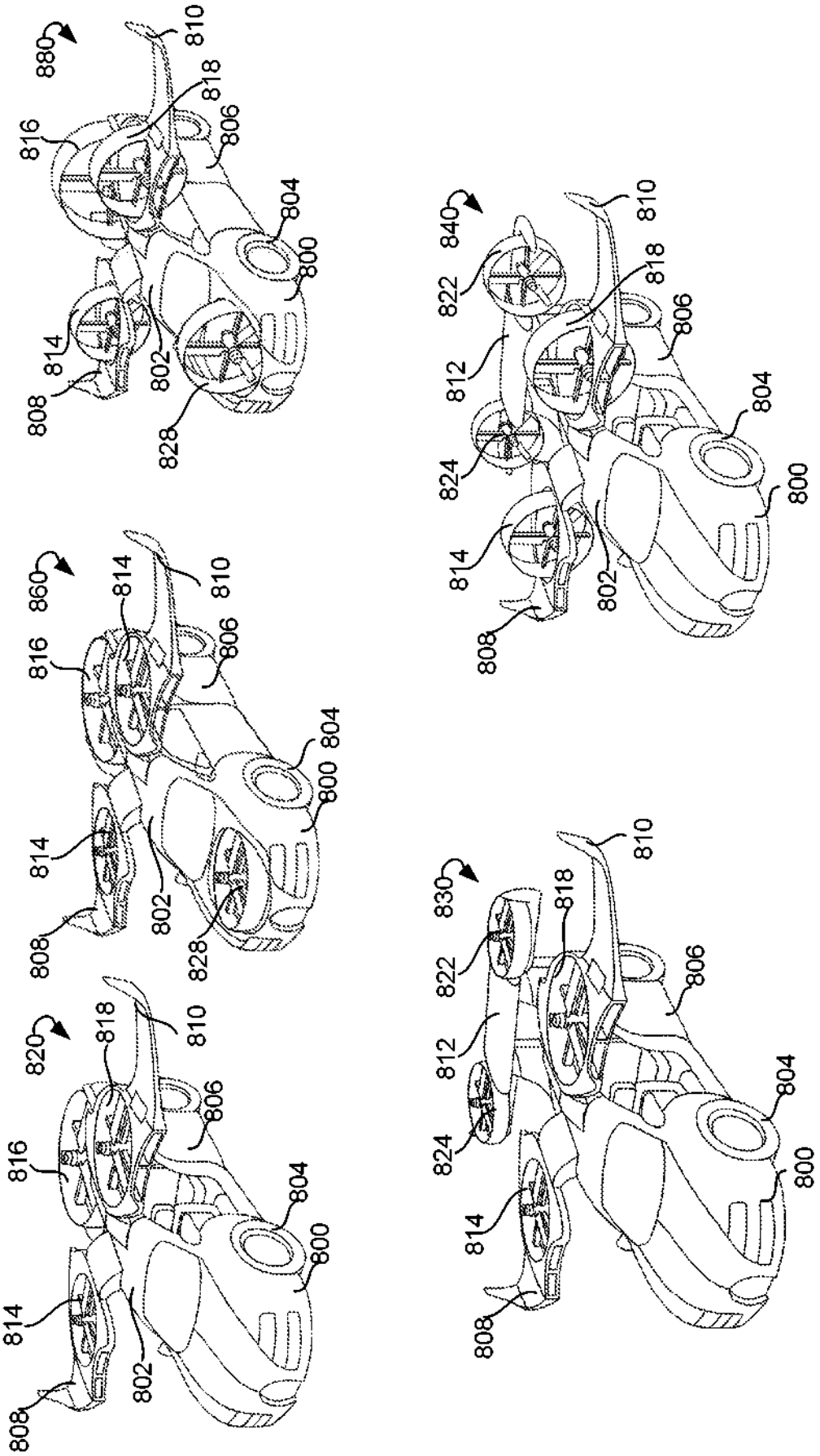
880
810
818
816
806
804
800
814
802
808
828
860
810
814
816
806
804
800
814
802
808
828
820
818
810
816
806
804
800
814
802
808
840
810
822
818
812
806
804
824
800
814
802
808
830
810
818
822
806
812
804
824
800
814
808

FIG. 8

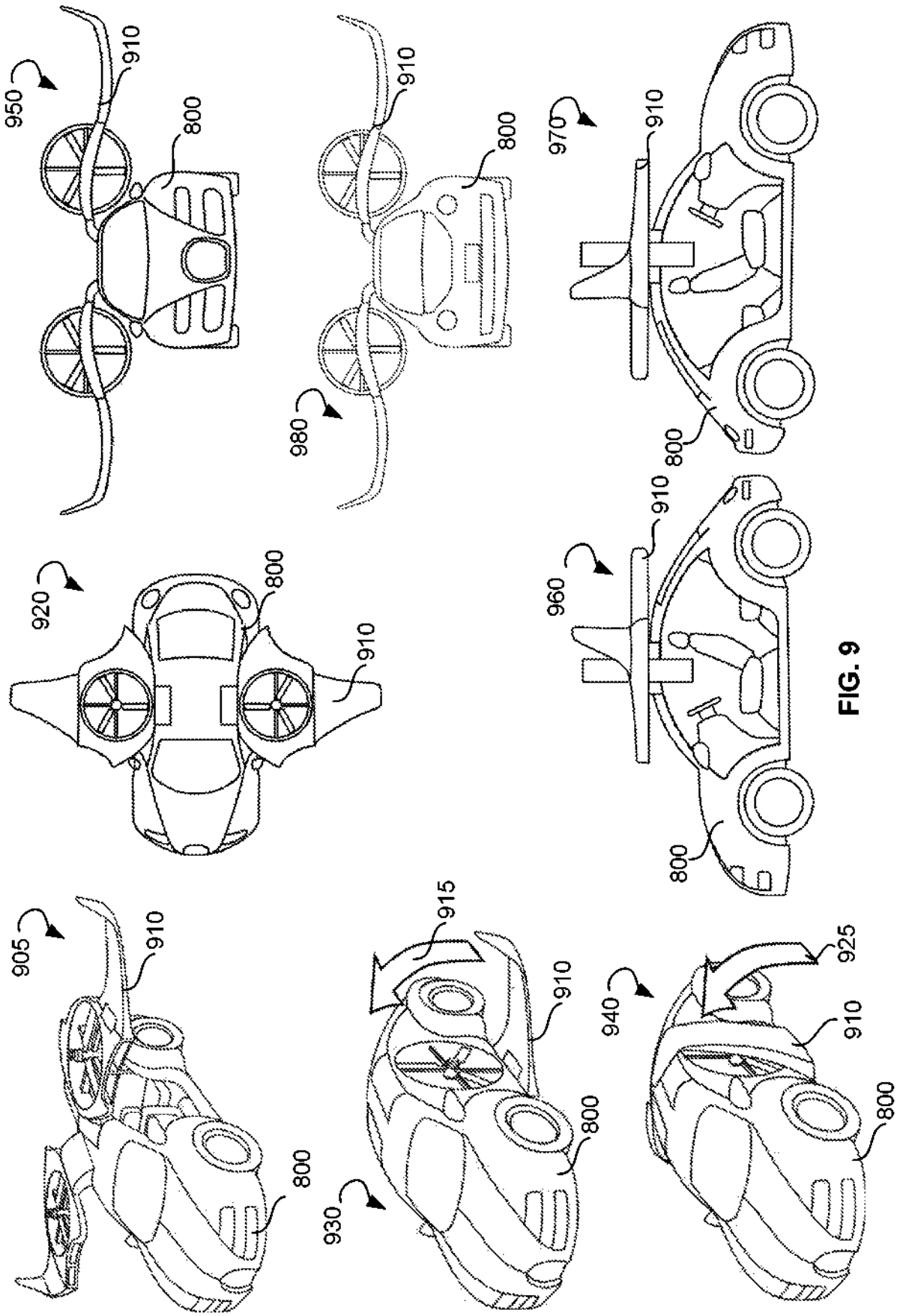
950
910
800
980
910
800
970
910
800
920
800
910
960
910
800
905
910
800
930
915
910
800
940
925
910
800

FIG. 9

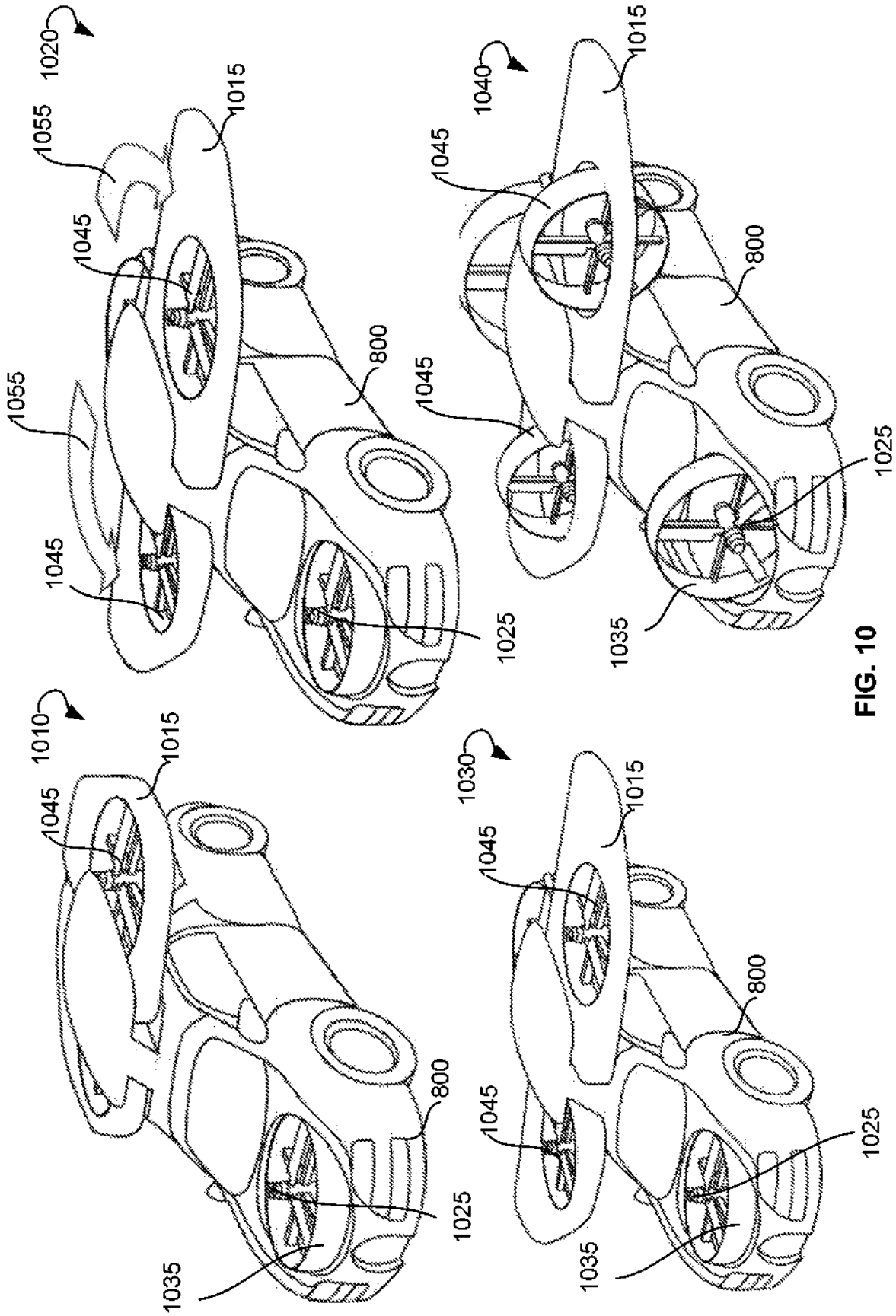
1020
1055
1015
1045
800
1055
1045
1025
1040
1015
1045
800
1045
1025
1035
1010
1015
1045
800
1025
1035
1030
1015
1045
800
1045
1025
1035

FIG. 10

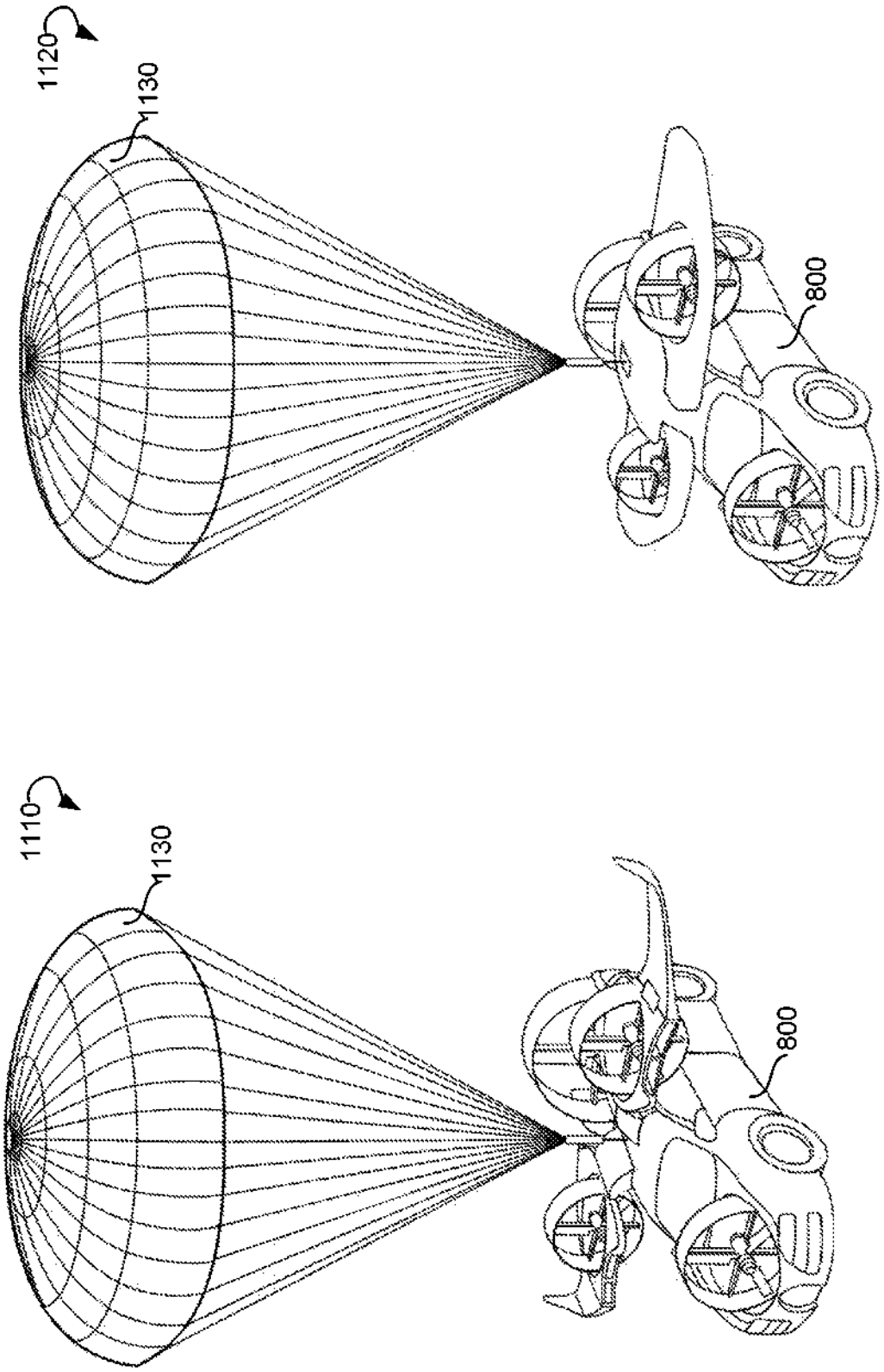

FIG. 11

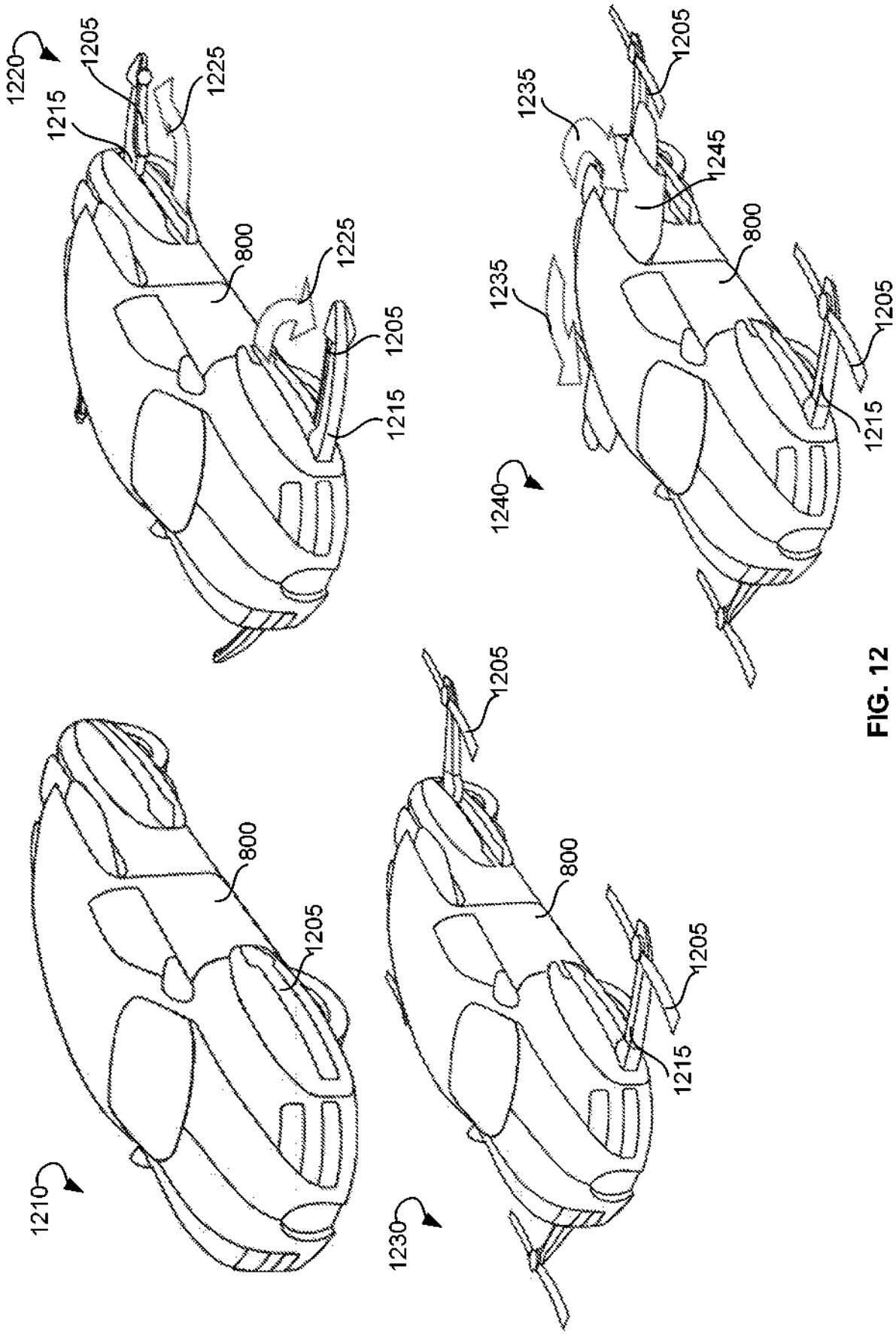
1220
1205
1215
1225
800
1225
1205
1215
1210
800
1205
1230
1205
800
1205
1215
1240
1235
1205
1245
800
1235
1205
1215

FIG. 12

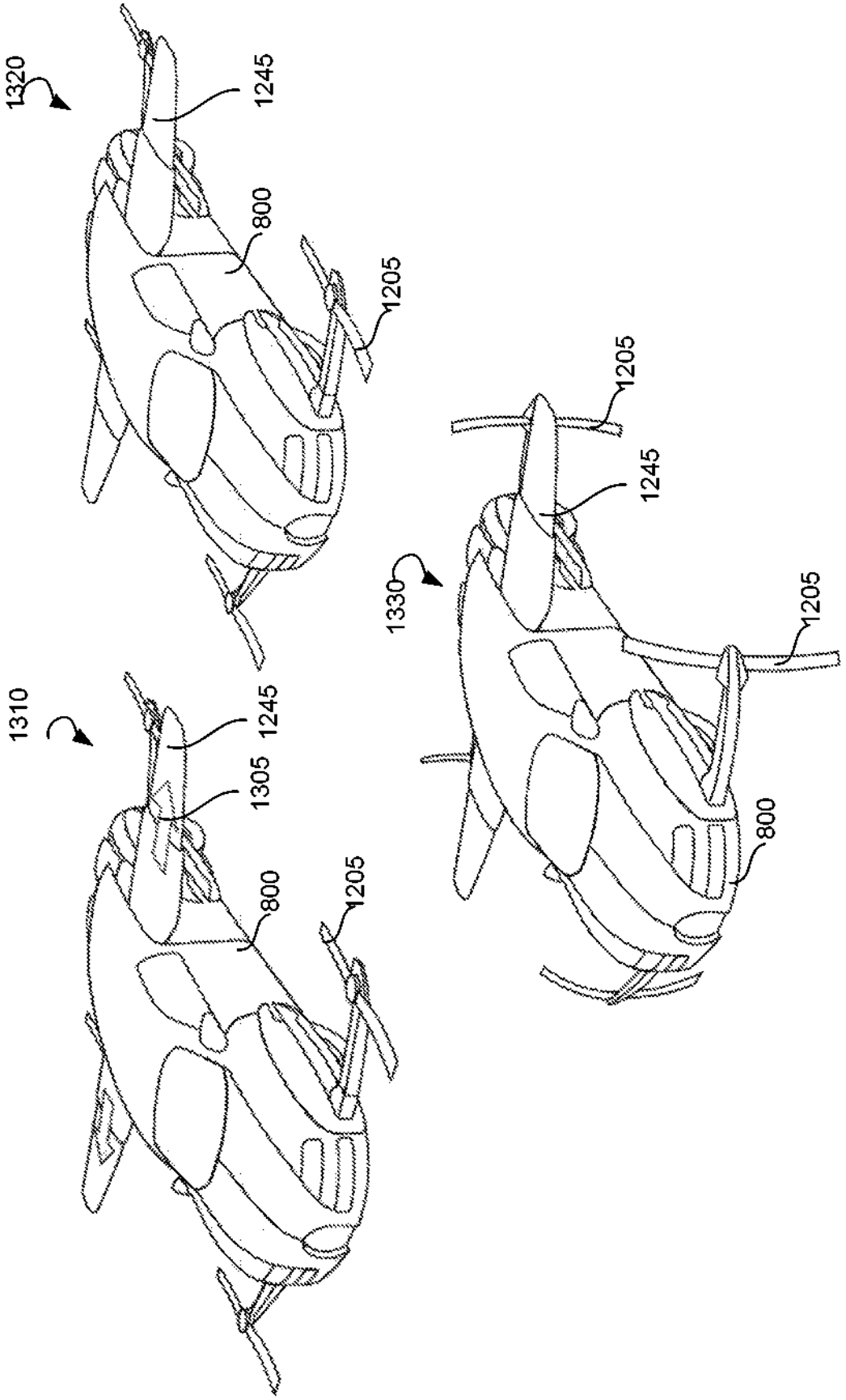
1320
1245
800
1205
1310
1245
1305
800
1205
1330
1205
1245
1205
800

FIG. 13

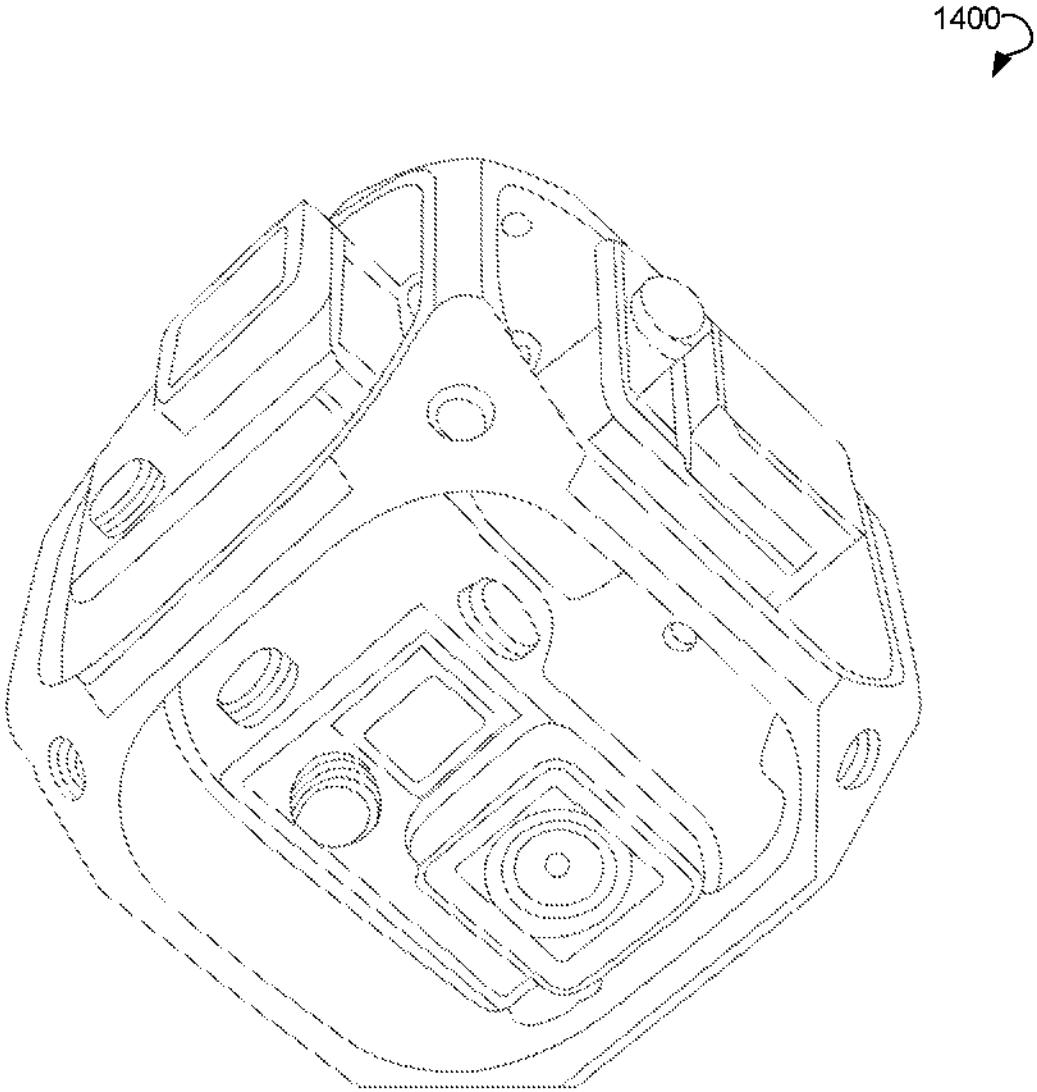

FIG. 14

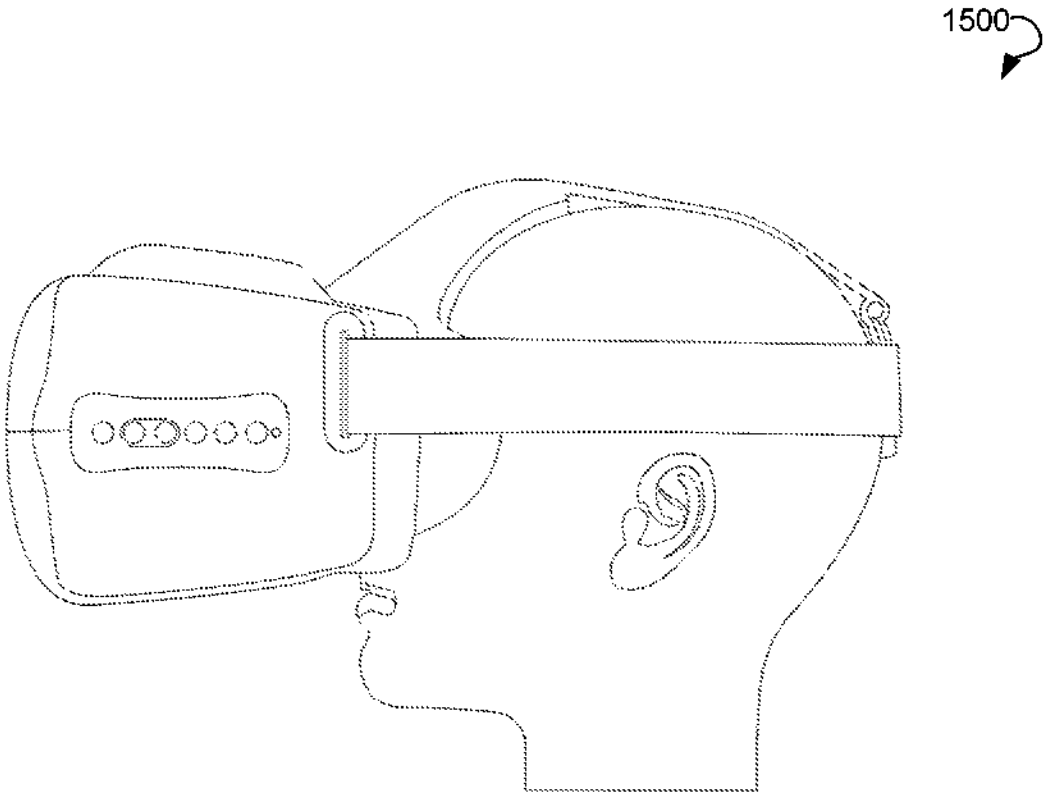

FIG. 15

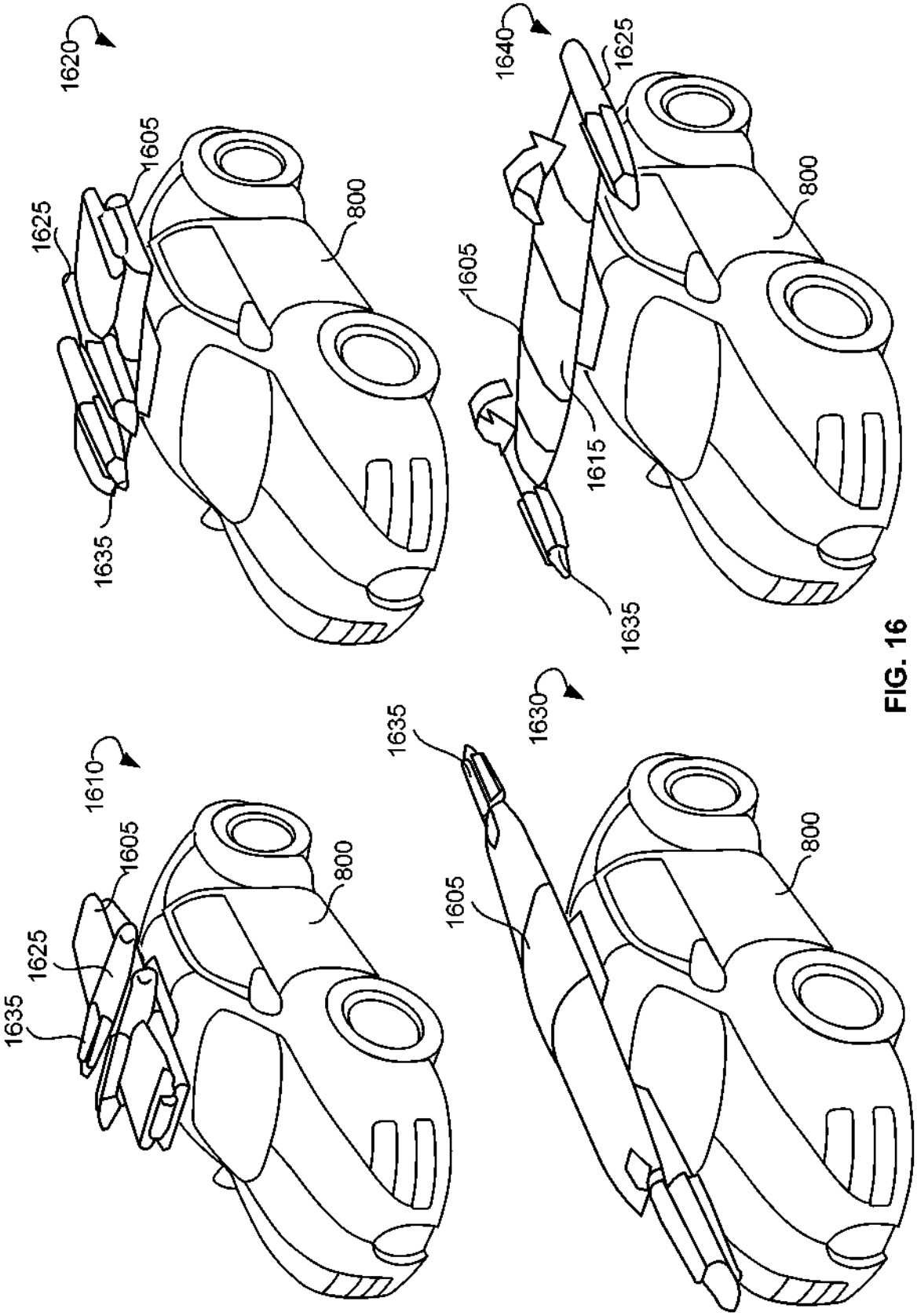
1620
1625
1605
1635
800
1640
1625
1605
1615
1635
800
1610
1605
1625
1635
800
1630
1635
1605
800

FIG. 16

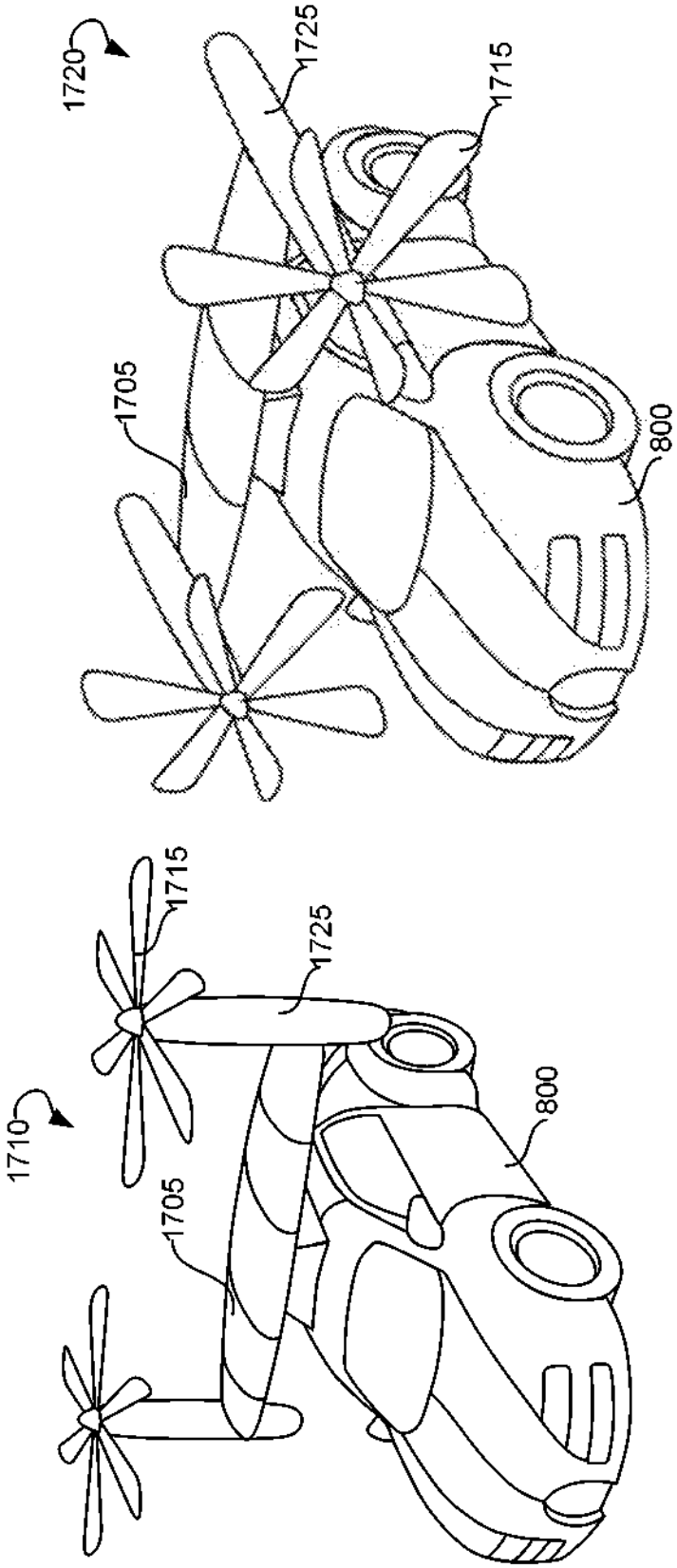

FIG. 17

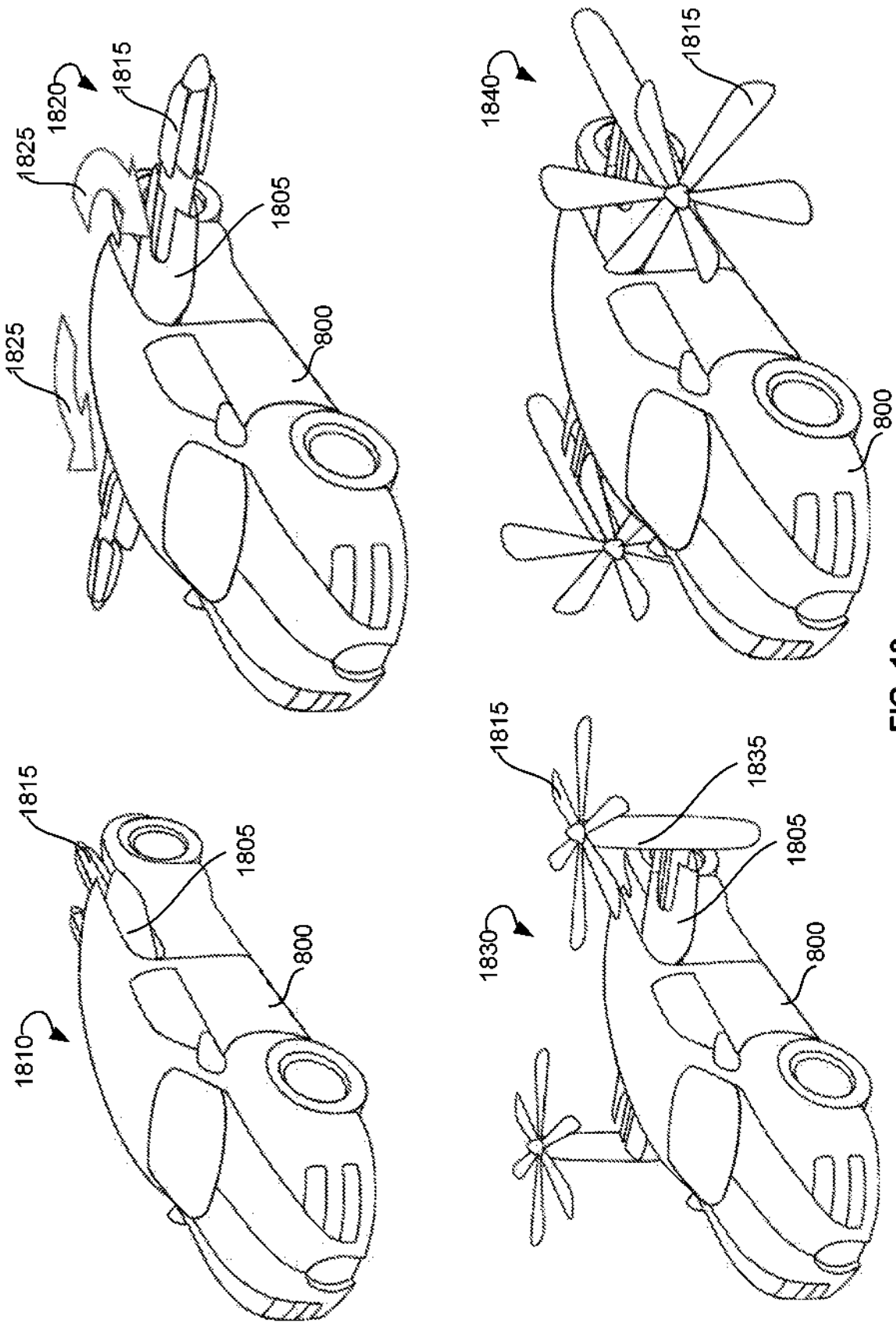
1825
1820
1815
1805
800
1825
1810
1815
1805
800
1840
1815
800
1830
1815
1835
1805
800

FIG. 18

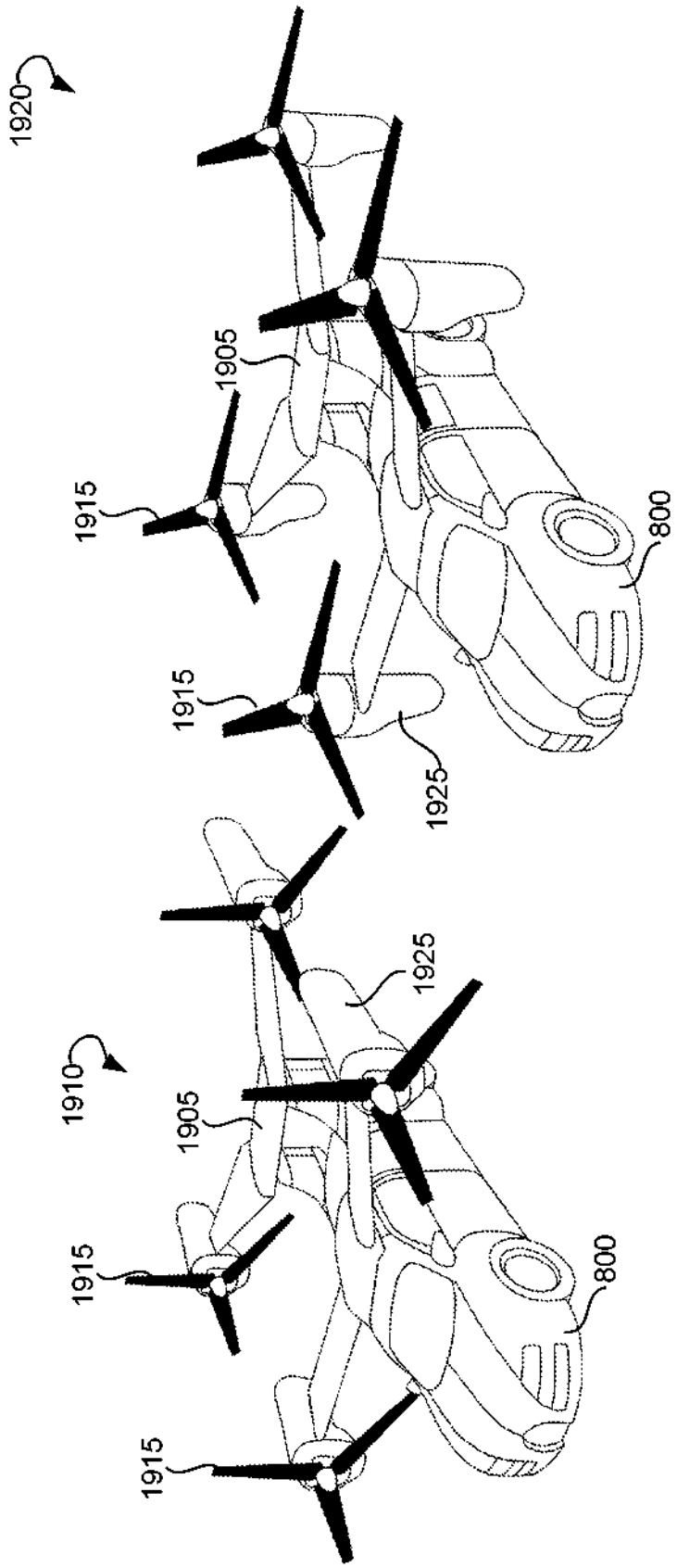

FIG. 19

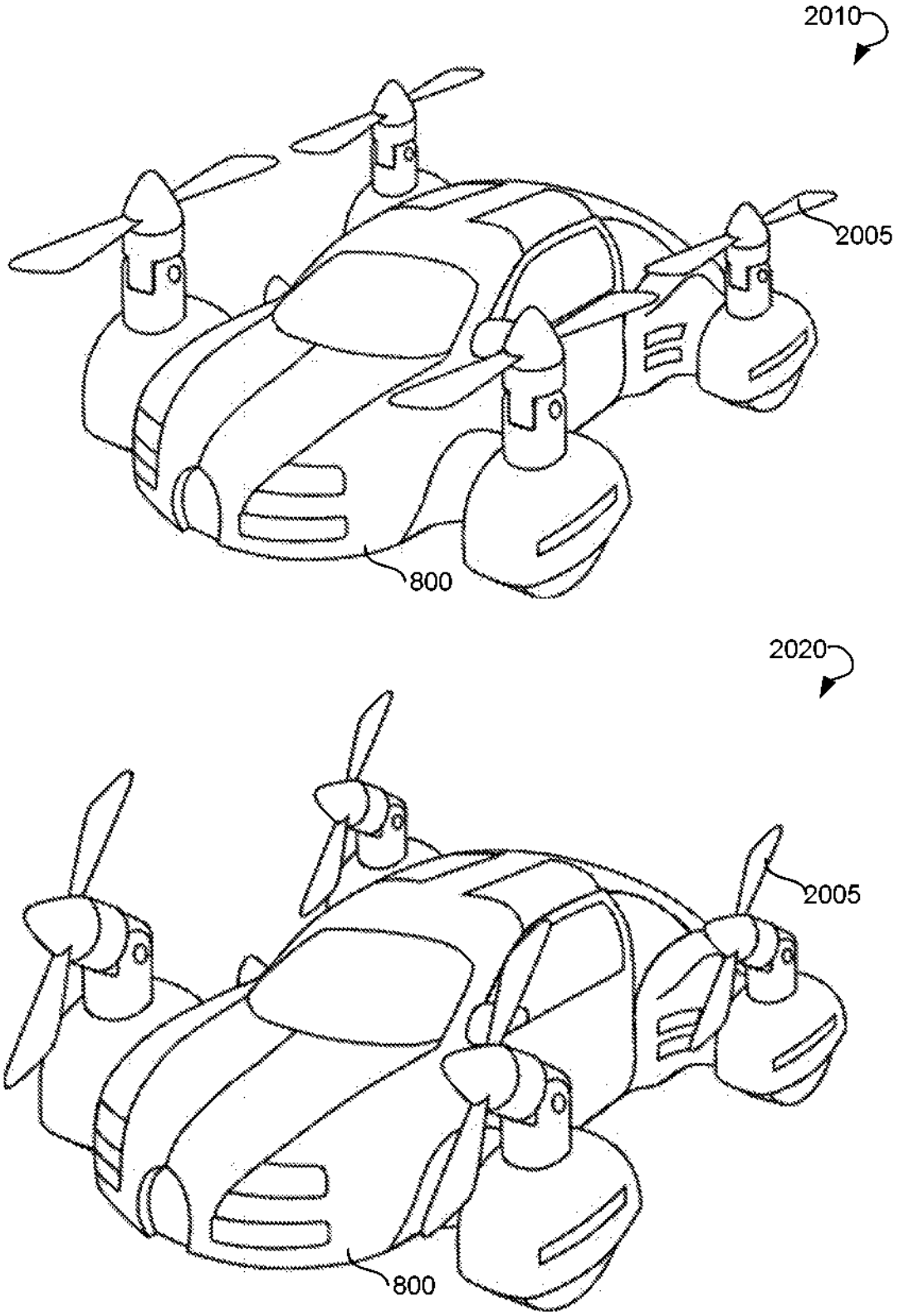

FIG. 20

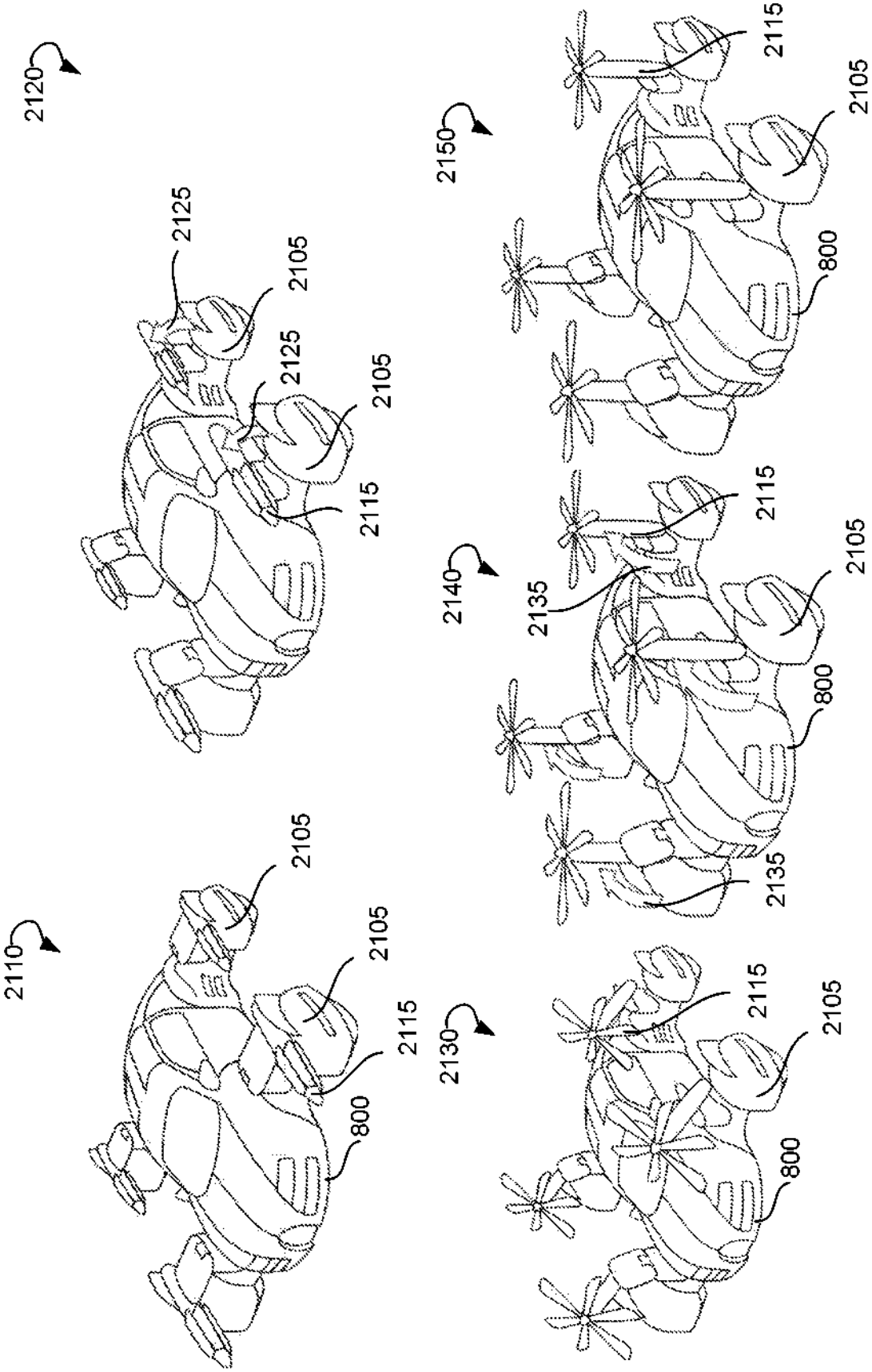
2110
2105
2105
2115
800
2120
2125
2105
2125
2105
2115
2130
2115
2105
800
2140
2135
2115
2105
800
2135
2150
2115
2105
800

FIG. 21

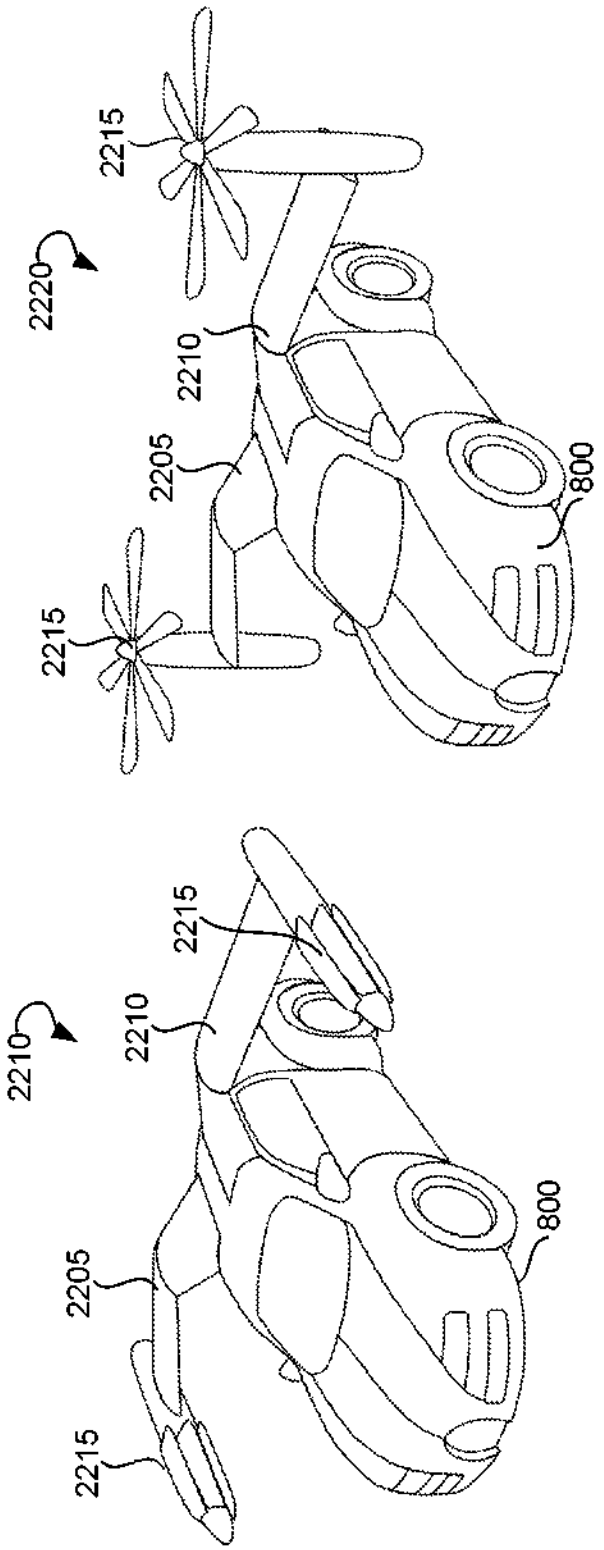

FIG. 22

INTERNATIONAL SEARCH REPORT

International application No.
PCT/IB2016/056829

A. CLASSIFICATION OF SUBJECT MATTER

B64C 39/02(2006.01)i; B60F 5/02(2006.01)i

According to International Patent Classification (IPC) or to both national classification and IPC

B. FIELDS SEARCHED

Minimum documentation searched (classification system followed by classification symbols)

B64C, B60F

Documentation searched other than minimum documentation to the extent that such documents are included in the fields searched

Electronic data base consulted during the international search (name of data base and, where practicable, search terms used)

CNABS,CNKI,VEN:unmanned,propeller,rotor,tilt,video,camera,amphibious

C. DOCUMENTS CONSIDERED TO BE RELEVANT

Category*	Citation of document, with indication, where appropriate, of the relevant passages	Relevant to claim No.
PX	US 2016114887 A1 (ZHOU DYLAN T X. ET AL) 28 April 2016 (2016-04-28) See the whole document	1-30
A	CN 104669964 A (UNIV BEIJING TECHNOLOGY) 03 June 2015 (2015-06-03) See description, paragraphs [0047] to [0072] and figures 1 to 9	1-30
A	WO 2014058511 A3 (BYE UAS INC. ET AL) 19 June 2014 (2014-06-19) See description, paragraphs [0038] to [0112] and figures 1 to 32	1-30
A	CN 102362141 A (AEROVIRONMENT INC) 22 February 2012 (2012-02-22) See description, paragraphs [0031] to [0041] and figures 1 to 5	1-30
A	US 8256704 B2 (LUNDGREN GERT. ET AL) 04 September 2012 (2012-09-04) See the whole document	1-30
A	US 7472863 B2 (PAK STEVE) 06 January 2009 (2009-01-06) See the whole document	1-30
A	US 2015197335 A1 (ISRAEL AEROSPACE IND LTD.ET AL) 16 July 2015 (2015-07-16) See the whole document	1-30

☐ Further documents are listed in the continuation of Box C. ☑ See patent family annex.

* Special categories of cited documents:

"A" document defining the general state of the art which is not considered to be of particular relevance

"E" earlier application or patent but published on or after the international filing date

"L" document which may throw doubts on priority claim(s) or which is cited to establish the publication date of another citation or other special reason (as specified)

"O" document referring to an oral disclosure, use, exhibition or other means

"P" document published prior to the international filing date but later than the priority date claimed

"T" later document published after the international filing date or priority date and not in conflict with the application but cited to understand the principle or theory underlying the invention

"X" document of particular relevance; the claimed invention cannot be considered novel or cannot be considered to involve an inventive step when the document is taken alone

"Y" document of particular relevance; the claimed invention cannot be considered to involve an inventive step when the document is combined with one or more other such documents, such combination being obvious to a person skilled in the art

"&" document member of the same patent family

Date of the actual completion of the international search	Date of mailing of the international search report
19 January 2017	**08 March 2017**
Name and mailing address of the ISA/CN **STATE INTELLECTUAL PROPERTY OFFICE OF THE P.R.CHINA** **6, Xitucheng Rd., Jimen Bridge, Haidian District, Beijing 100088** **China**	Authorized officer **SUN,Jinfeng**
Facsimile No. **(86-10)62019451**	Telephone No. **(86-10)62085285**

Box No. III Observations where unity of invention is lacking (Continuation of item 3 of first sheet)

This International Searching Authority found multiple inventions in this international application, as follows:

[1] Claims 1,16, and 23 do not have the same or corresponding technical feature. Further, they do not have the same or corresponding special technical feature. Therefore the inventions are not so linked as to form a single general inventive concept, as required by PCT Rule 13.1.

1. ☐ As all required additional search fees were timely paid by the applicant, this international search report covers all searchable claims.

2. ☑ As all searchable claims could be searched without effort justifying additional fees, this Authority did not invite payment of additional fees.

3. ☐ As only some of the required additional search fees were timely paid by the applicant, this international search report covers only those claims for which fees were paid, specifically claims Nos.:

4. ☐ No required additional search fees were timely paid by the applicant. Consequently, this international search report is restricted to the invention first mentioned in the claims; it is covered by claims Nos.:

Remark on Protest

☐ The additional search fees were accompanied by the applicant's protest and, where applicable, the payment of a protest fee.

☐ The additional search fees were accompanied by the applicant's protest but the applicable protest fee was not paid within the time limit specified in the invitation.

☐ No protest accompanied the payment of additional search fees.

INTERNATIONAL SEARCH REPORT
Information on patent family members

International application No.
PCT/IB2016/056829

Patent document cited in search report			Publication date (day/month/year)	Patent family member(s)			Publication date (day/month/year)
US	2016114887	A1	28 April 2016	US	9493235	B2	15 November 2016
CN	104669964	A	03 June 2015		None		
WO	2014058511	A3	19 June 2014	EP	2880860	A4	08 June 2016
				WO	2014058511	A2	17 April 2014
				EP	2880860	A2	10 June 2015
				US	2015207964	A1	23 July 2015
				WO	2014058511	A9	24 July 2014
CN	102362141	A	22 February 2012	JP	2015212617	A	26 November 2015
				JP	2012516988	A	26 July 2012
				AU	2010239639	A1	08 September 2011
				CN	105783594	A	20 July 2016
				KR	20110133557	A	13 December 2011
				EP	2391863	A1	07 December 2011
				US	9127908	B2	08 September 2015
				JP	6013737	B2	25 October 2016
				AU	2010239639	B2	15 January 2015
				US	2016025457	A1	28 January 2016
				EP	2391863	A4	02 July 2014
				SG	173856	A1	29 September 2011
				CA	2759383	A1	28 October 2010
				WO	2010123611	A1	28 October 2010
				US	2010198514	A1	05 August 2010
US	8256704	B2	04 September 2012	US	2009045295	A1	19 February 2009
US	7472863	B2	06 January 2009	US	2006016930	A1	26 January 2006
US	2015197335	A1	16 July 2015	WO	2014045276	A1	27 March 2014
				EP	2897863	A1	29 July 2015
				SG	11201500170X	A	30 March 2015
				EP	2897863	A4	27 April 2016
				KR	20150058197	A	28 May 2015